Project X was an absolute thrill for the design team behind the X-Wedge™. Building five prototype engines, getting them to five customers and being involved in the creation of the first five custom bikes featuring an X-Wedge gave the team a lot of inspiration to get the new engine ready for release. Throughout the 2007 show season, the Project X bikes toured with the S&S display rig and everywhere they went the crowd was interested and excited by the bikes. Interestingly, just as these bikes were unveiled to the public, Kevin Alsop at Big Bear Choppers made his X-Wedge support shown as he unveiled a custom BBC bike proudly running with an X-Wedge in it.

BIG DOG MOTORCYCLES

BOURGET'S BIKE WORKS

EDMONDSON CUSTOM BUILT

ARLEN NESS® MOTORCYCLES

RUCKER PERFORMANCE

MAIN BEARING INSTALLATION TOOL

Main bearing installation tool for S&S® X-Wedge engines installs and removes plain bearing inserts for camside and driveside mainshaft bearings.

Main Bearing Installation Kit .....MSRP $69.95 **106-0718**

CAM ALIGNMENT TOOLS

Here are some very handy tools for aligning the three cams and installing the cam belt in an S&S X-Wedge engine. The three dowel pins are used to position each of the three cam belt pulleys with alignment holes in the cam plate. With the cams correctly positioned, it is a simple job to install the cam drive belt using the cam belt tensioner socket and a ⅜" ratchet. One more reason why the X-Wedge engine is so easy to work on.

Cam Alignment Dowels (3 pack).....MSRP $6.95 **106-0576**

Cam Belt Tensioner Socket.....MSRP $24.95 **106-0750**

S&S® cam belt tensioner sprocket and cam alignment dowels make aligning the three cams of an X-Wedge™ engine and installing a cam belt an easy thing. Must-have tools for any technician servicing X-Wedge engines.

53-0051 CYLINDER TORQUE PLATE KIT

The S&S cylinder torque plate kits are used to simulate operating stress conditions when boring and honing aluminum cylinders. These plates are machined from heat treated chrome moly steel, and precision ground on the working surfaces.

As S&S rolls out the new X-Wedge™ engine series, just as importantly, we are also rolling out the tools needed to repair them. That's what Proven Performance® is all about.

These torque plates are required to bore or hone X-Wedge cylinders. They have the X-Wedge five bolt pattern and are available for 4⅛" bore and 4¼" bore cylinders.

Cylinder Torque Plate Kit

4¼" Bore ..... Call For Pricing **106-0839**

4⅛" Bore..... Call For Pricing **106-0836**

Replacements parts for each kit also available.

NOTE: *See the S&S Dealer Catalog or visit the S&S Website for further information.*

106-2858

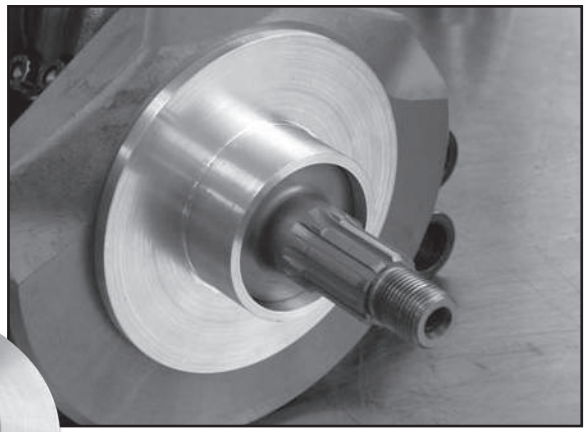

Pictured Left: This new bearing protector prevents mishaps from occurring when mounting an X-Wedge™ crank on the S&S Flywheel assembly fixture. An ounce of prevention is worth a 42 pounds of cure. Works on the sprocket side of Victory® crankshafts too!

BEARING PROTECTOR TOOLS

Since the main bearings in an S&S® X-Wedge engine consist of tri-metal insert bearings and precision crank journals, it is vitally important to protect these surfaces from damage during assembly. S&S has two new tools to make it a lot easier to do.

Crankshaft Main Bearing Protector ..... Call For Pricing **106-2858**

Crankcase Main Bearing Insert Protector ..... Call For Pricing **106-2859**

106-2859

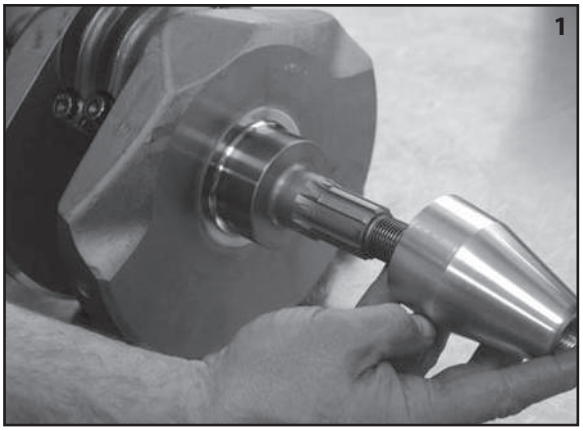

Pictured Left: Easy as 1-2-3! 106-2858 crankcase bearing protector installs in seconds, and not only protects the crankcase main bearing insert from the sharp surfaces on the sprocket shaft, but also guides the crankshaft into the bearing.

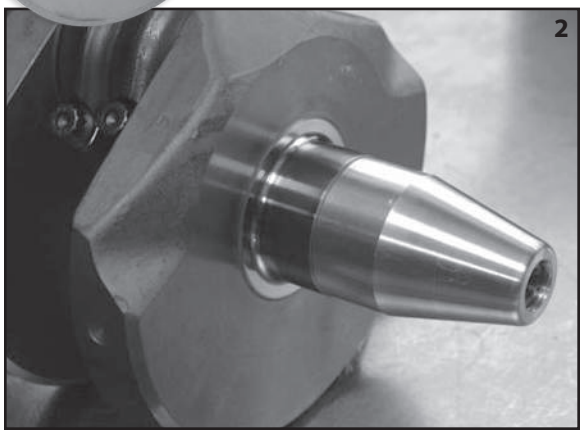

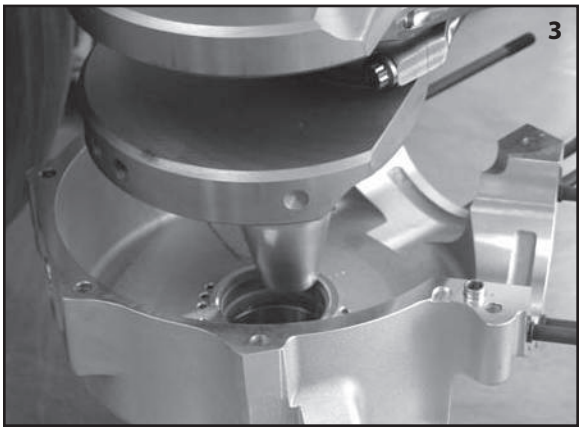

S&S® X-WEDGE™ ENGINE

1-1 Introduction

2-1 General Specifications

3-1 Engine Components

3-2 Rocker Covers and Arms
3-6 Cylinder Heads
3-14 Cylinders
3-20 Pistons
3-22 Cases
3-32 Crankshaft
3-36 Camchest and Pushrods

4-1 Oil Pump

5-1 Fuel Injection

6-1 Troubleshooting

7-1 Installation Instructions

8-1 Illustrations & Warranty

8-2 Cases
8-3 Cams and Related Valve Train Components
8-4 Cylinder Heads
8-6 Oil Pump
8-7 Intake Components
8-8 Single Bore Tuned Induction and Teardrop Air Cleaner
8-9 Warranty

Because every industry has a leader

Introduction

This manual was created to help you maintain your S&S® engine. It outlines the procedures necessary for both a home mechanic or shop technician to ensure that the S&S engine in your bike lasts as long as possible. Obviously there are some safety considerations we ask that you read and follow before you turn any wrenches.

SAFETY GUIDELINES

1- Gasoline is extremely flammable and as such, explosive. When you are servicing the carb or fuel-injection unit, gasoline could leak out and come in contact with the motorcycle. For this reason, try not to work on a hot motorcycle or have an open flame near the gas or fumes it gives off. Smoking is not recommended when you work near gasoline.
2- Be sure to wear protective glasses or goggles when you work with compressed air. Small chips of metal or debris can easily be projected into your eye from the air pressure. Also, never aim an air hose nozzle at yourself or anyone else since debris in the line can be shot out with tremendous force.
3- Chemicals and solvents have many potential dangers. Safety precautions can be found by reading the label on the container. Please take the time to do so.
4- Allow a hot motorcycle to cool off before you work on it. It's easier to do things the right way when you are not trying to avoid being burned.
5- Always disconnect the battery when you work on your motorcycle to avoid accidentally engaging the starter or damaging electrical components.
6- Read the instructions before you start any service work. If you are unsure of how a procedure is done, additional instruction sheets are available at www.sscycle.com or call the S&S Tech Line for help.
7- Consult the appropriate service manual for the vehicle you are working on for any procedure outside the scope of this service manual.
8- Start any and all service work with a clear head. Do not attempt to service or repair your S&S engine when tired or under the influence of alcohol or drugs.
9- Be sure that all fuel and oil lines are routed properly and cannot make contact with a moving or hot part of the motorcycle.
10- Before you ride a motorcycle equipped with an S&S engine, make sure that the throttle cables are not binding and are routed properly. Also turn the handlebars a full turn to each side to assure there is no restriction in the throttles operation at that point. Properly routed cables will allow the throttle to snap back into position when you release it.
11- Exhaust fumes are poisonous and can kill you. Please make sure that you have adequate ventilation when working on or tuning your motorcycle.
12- The right tools make servicing your engine much easier. Do your best to ensure you have all of the specialty tools specified in each segment of this manual.

SERVICE PREPARATION

1- S&S® supports the efforts of our customers in performing work on their own motorcycles. It is up to the individual to determine if he or she has the skills necessary to perform any of the procedures outlined in this manual. If a task or procedure is beyond your comfort level after reading the proper section of the manual, a list of S&S dealers is located on our web page at www.sscycle.com. Any of these shops or dealers can assist you.

2- Proper preparation will ensure that the job is done efficiently and safely. A clean work area at the start of each job will allow you to complete the work as easily and quickly as possible while preventing lost or misplaced tools and parts. A dirty motorcycle should be cleaned up before starting work; often this may assist in finding the true cause of a mechanical problem or may identify additional areas of concern.

3- Required tools should be identified before the job is started. This manual will identify when specialty tools are required or recommended. Often the use of a specialty tool will make the job easier and prevent damage or injury.

PRODUCT REFERENCES

1- The use of the term Harley-Davidson®, or the use of any other H-D® terms such as Twin Cam 88® or Evolution®, or the use of model designations such as xl or V²® is for reference purposes only and does not imply an endorsement by Harley-Davidson, Inc.

2- Where reference is made to a specific brand name product, tool, or instrument, an equivalent or like product may be used in place of the one mentioned. Any reference to the use of a brand name product, tool, or instrument does not constitute an endorsement or recommendation of that product by S&S Cycle, Inc.

TECHNICAL ASSISTANCE

1- For technical assistance with any S&S product, send an email to sstech@sscycle.com or call 608-627-TECH between 8am and 5pm CST, Monday through Friday. Also you can visit www.sscycle.com and download additional instruction sheets for the component you are working on.

PRODUCTION BIKE INFORMATION

1- Due to strict guidelines enforced by the EPA, the OE manufacturer of your motorcycle instructs S&S Cycle to build your motor to exacting emission specifications. For that reason we suggest you contact that manufacturer for a list of differences between standard S&S engines and the unit found in your motorcycle.

Because every industry has a leader

General Specifications

INTRODUCTION

The S&S® X-Wedge™ engine you have purchased is an air-cooled v-twin. It is designed to offer proven performance and reliability. Specifications for this 117ci engine are based on the original factory production design. Some changes to this engine may have been made by the Original Equipment Manufacturer of your motorcycle to meet stringent EPA requirements. For that reason we suggest you contact the manufacturer of your motorcycle for a list of differences between your engine and the production S&S X-Wedge. The X-Wedge is a 56°, three cam engine that is compatible with standard drive train, but does require a different mount and frame configuration.

Fig. 2-1
X-Wedge

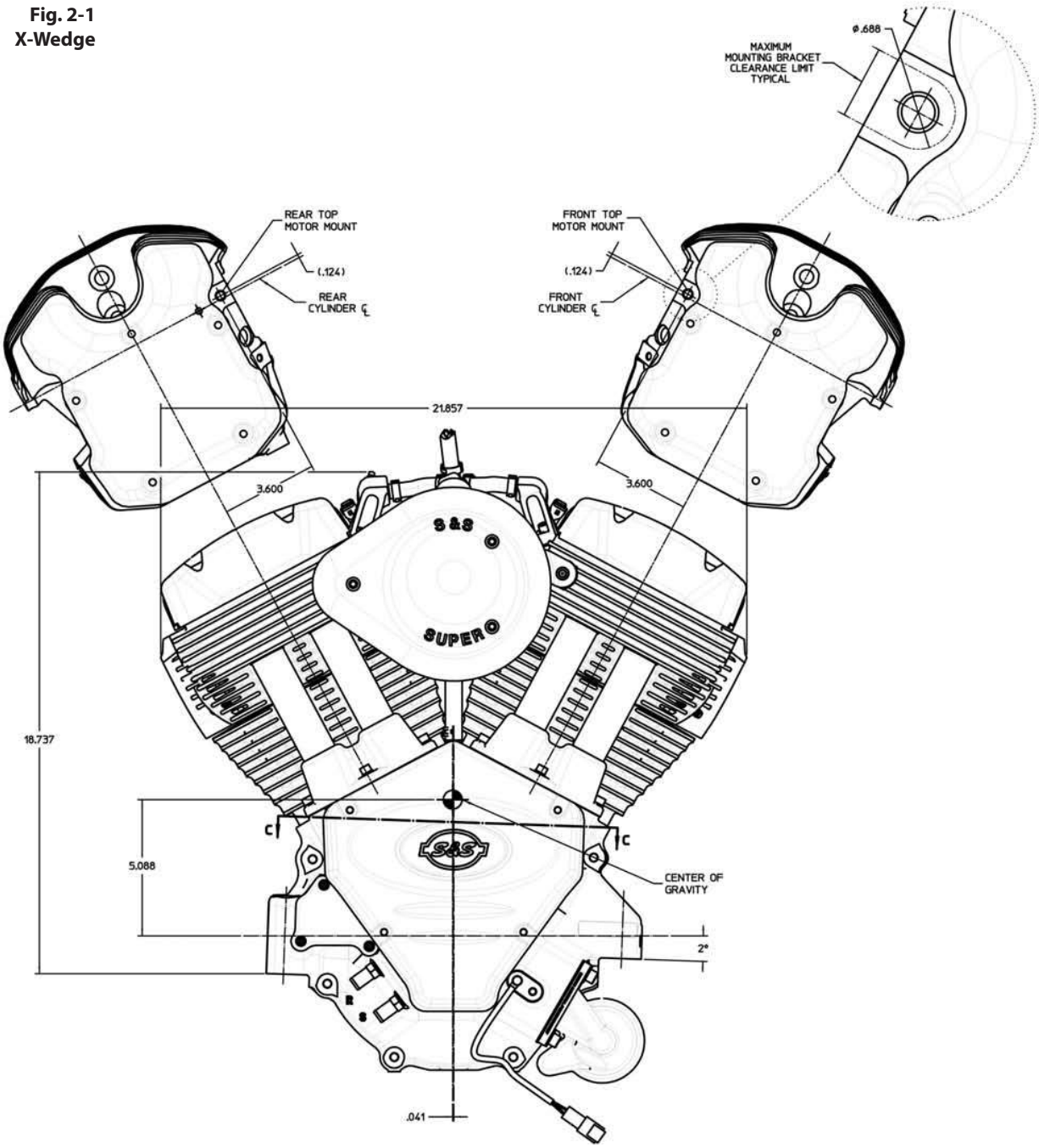

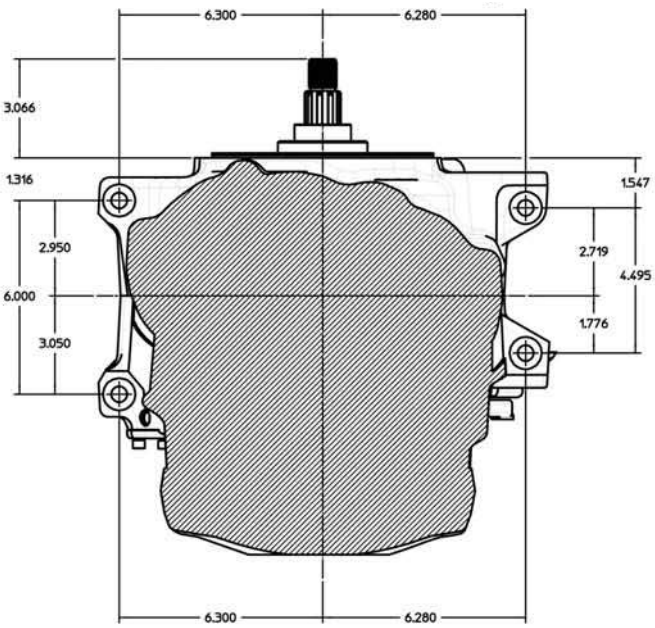
6.300
6.280
3.066
1.316
1.547
2.950
2.719
4.495
6.000
1.776
3.050
6.300
6.280

SECTION C-C

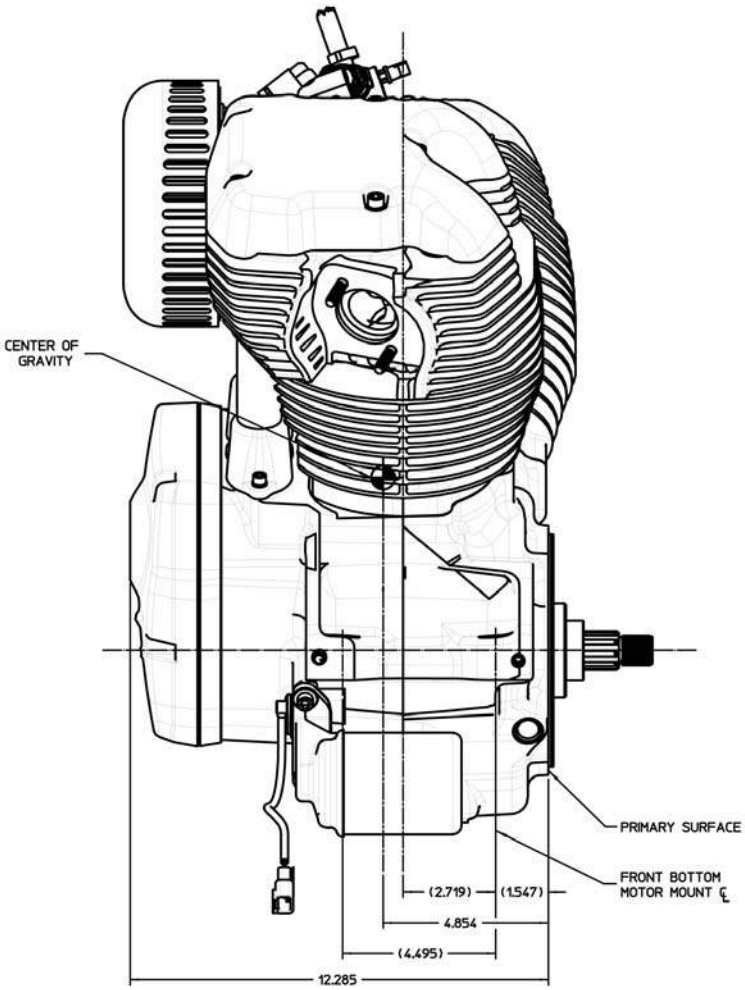
CENTER OF GRAVITY
PRIMARY SURFACE
FRONT BOTTOM MOTOR MOUNT ℄
(2.719)
(1.547)
4.854
(4.495)
12.285

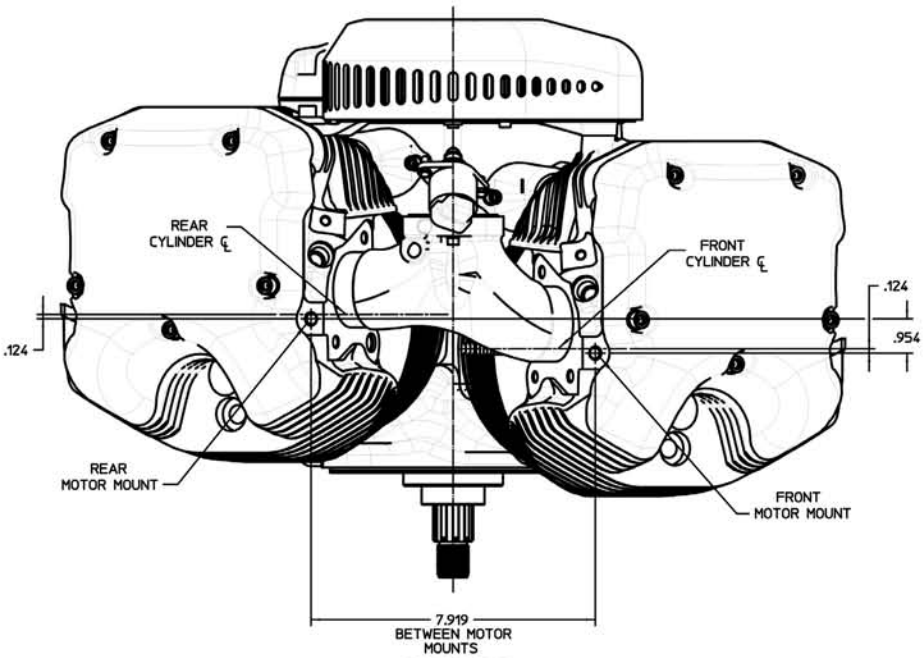
REAR
CYLINDER ℄
FRONT
CYLINDER ℄
.124
.954
.124
REAR
MOTOR MOUNT
FRONT
MOTOR MOUNT
7.919
BETWEEN MOTOR
MOUNTS

SECTION D-D

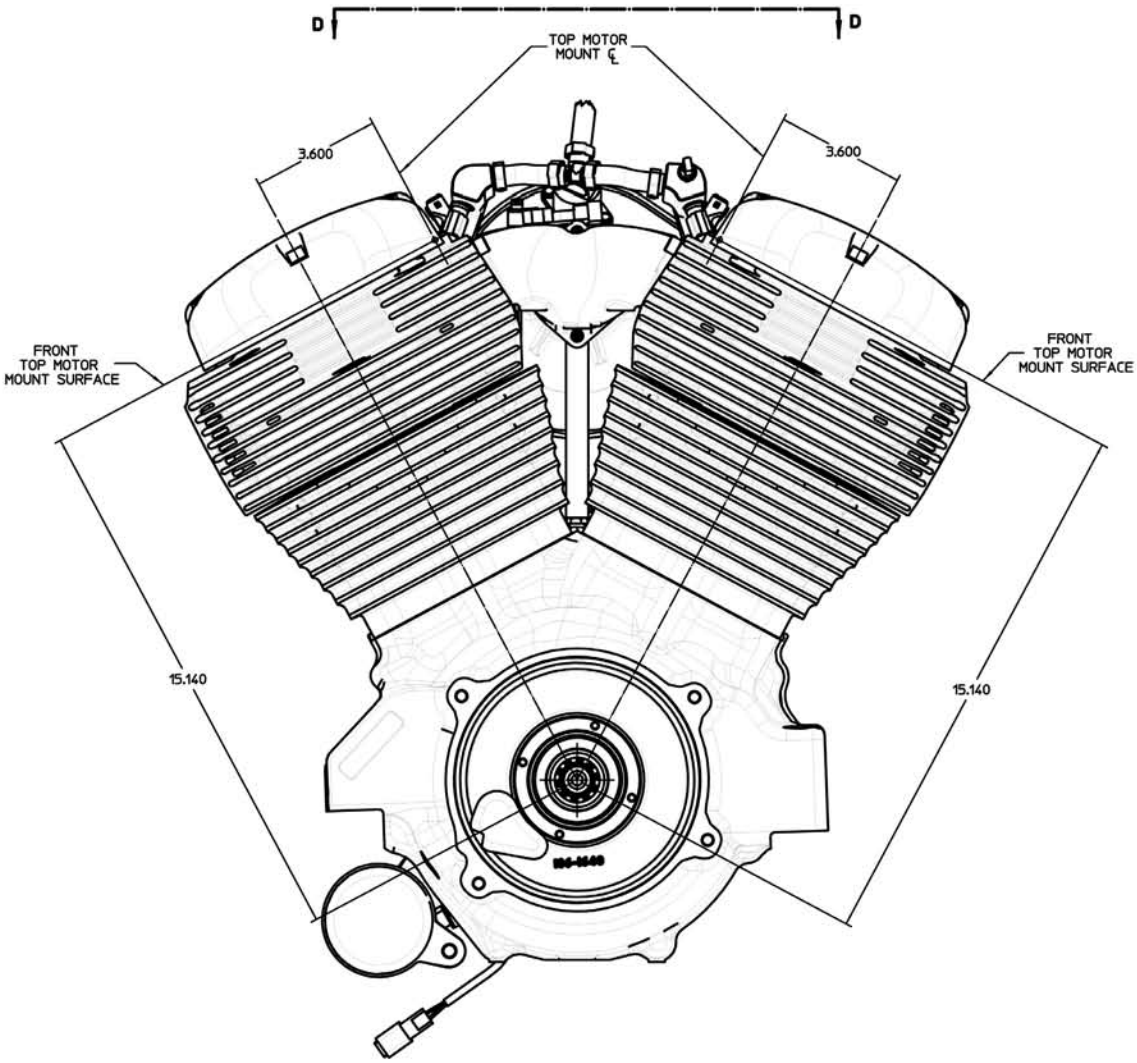
D
D
TOP MOTOR
MOUNT ℄
3.600
3.600
FRONT
TOP MOTOR
MOUNT SURFACE
FRONT
TOP MOTOR
MOUNT SURFACE
15.140
15.140

BREAK-IN AND OIL RECOMMENDATIONS

The first few rides on your new S&S® X-Wedge™ engine are the most important. As with any air-cooled engine, heat is the major enemy you can encounter. Engine cooling is based on air flow over the cooling fins. Your engine cools as air flows past the cylinder fins and the oil circulates. Sitting still for extended periods of time—at a crowded bike rally in traffic—will prevent air from flowing past the engine. Situations like this should be avoided anytime possible—but especially during the break-in period.

S&S suggests maintaining oil temperatures of 180-250 degrees.

Initial Riding Note

Oil temperature is a big concern with your new engine. Be aware that your new X-Wedge will have slightly higher oil temperatures during break-in. Do everything you can to keep oil temperatures as low as possible during break-in.

The Best Break-In Procedures for X-Wedge Engines

The initial start-up of your X-Wedge engine is the most important time of your new engine's life. You do not want the engine to produce excess internal heat during this period. What we recommend is a series of heat cycles.

When installation is complete, start the engine and run it at idle speed for 30-45 seconds. After the engine has completely cooled, repeat this procedure five times letting the engine cool completely between each run cycle.

After these initial brief starts you can begin to run the engine in a more normal fashion. The first 50 miles are the most critical. Keep the RPMs below 2500, do not lug the engine, ride it conservatively. Remember that your engine is equipped with an internally programmed break-in rev limiter.

During the break-in period the ECU will automatically limit engine RPM in two stages during the first 20 hours of engine operations. During the first two hours of operation the rev limiter is 4250 RPM. From two hours to 20 hours of engine operation the rev limit is 5125 RPM. After 20 hours the rev limit is 5800 RPM.

1- The first 50 miles should be ridden very conservatively.
2- Keep the RPM level below 2,500.
3- Change the engine oil and filter after riding 50 miles.
4- For the next 500 miles keep the RPM level below 3,500.
5- Avoid lugging the engine or maintaining a constant RPM level for any appreciable time during the break-in period.
6- Change the engine oil and filter at 500 miles.
7- From 500-1,000 miles ride the motorcycle normally. Be conservative and do not subject the engine to any harsh treatment like drag races, burnouts or dyno runs. Retorque engine fasteners.
8- Change the engine oil and filter at 2,500 miles.

OIL RECOMMENDATIONS

NOTE: *S&S recommends the use of Mobil 1® V-TWIN 20W-50 Synthetic in our engines.*

It is up to you to decide between synthetic and petroleum-based oil. S&S endorses the use of Mobil 1® V-TWIN 20W-50 Synthetic oil in our engines. Included with each new S&S engine are four quarts of Mobil 1 and an S&S oil filter. You can use this oil for the first 50 miles or an equivalent petroleum-based motorcycle oil. From 50 miles on, we do recommend the use of Mobil 1® V-TWIN 20W-50 Synthetic oil.

Fig. 2-2: Heavier oil will make starting more difficult in cold weather.

VISCOSITY	AMBIENT TEMPERATURE (°F)
SAE 20W50	Above 35°
SAE 10W40	Below 40°

OIL FILTER

We recommend the use of S&S filters PN 31-4103 (black) or PN 31-4104 (chrome).

FUEL

The gasoline used in your X-Wedge engine should have a minimum octane rating of 91. Do not use fuel additives and avoid the use of methanol blended fuels. Ethanol blends of up to 20% may be used.
Do not use E-85 fuel in your S&S engine.

CHARGING SYSTEM

The X-Wedge™ engine is designed to use 1999-up charging systems with a round stator plug. A 38-amp system is the minimum recommendation.

PRIMARY SPROCKET ALIGNMENT

To check the primary sprocket alignment follow the procedure in the factory service manual for your model motorcycle. Depending upon which charging system you are installing will determine what length spacer will be required.

Fig. 2-3

NOTE: *Be sure to use the proper spacer for your specific charging system.*

PRIMARY CONSIDERATIONS

S&S® X-Wedge™ engines are assembled with the sprocket shaft oil seal oriented with the lip facing in. This is how it should be run with a wet or dry primary.

SPARK PLUGS

S&S X-Wedge engines use Autolite® 4164 12mm spark plugs that should be gapped between .038" and .042".

SPARK PLUGS WIRES

The spark plug wires must be suppression type. Do not use any solid metal core plus wires.

Fig. 2-4: TIP: Always change your engine oil before an extended period of storage.

S&S RECOMMENDED REGULAR SERVICE INTERVALS	
ITEM	INTERVAL
Engine oil & filter	Change at 50, 500 and 2,500 miles. Every 2,500 miles thereafter or every six months, whichever comes first.[1]
Air cleaner	Inspect at 50 and 500 miles, every 2,500 miles thereafter. Replace every 5,000 miles.[1]
Petcock, lines & fittings vacuum lines	Inspect at 50 and 500 miles, every 2,500 miles thereafter.
Fuel tank filter screen & in-line fuel filter (if used)	Every 5,000 miles.
Engine idle speed	950-1,050 RPM. Non-adjustable.
Operation of throttle & enrichment device control	Inspect and lubricate throttle cables at 500 miles and every 2,500 miles thereafter.
Spark plugs	Inspect every 5,000 miles. Replace every 10,000 miles or as needed.
Engine mounts	Inspect at 500 miles and every 5,000 miles thereafter.
External fasteners except engine head bolts	Re-torque at 500 miles and every 5,000 thereafter.
Timing belt	Inspect every 10,000 miles. Replace every 30,000 miles.
[1] *Replace more frequently if engine is operated in a dusty environment.*	

Fig. 2-5

TORQUE SPECIFICATIONS		
Item	Torque	Recommended
Rocker Box 5⁄16"	15-18 ft-lbs	243 blue
Cylinder head bolts	8ft-lbs, 18 ft-lbs, then 90°	Oil
Cylinder studs in case	10 ft-lbs	272 red
Crankcase fasteners	15-18 ft-lbs	243 blue
Tappet cover fasteners	90-120 ft-lbs	243
Cam chest cover fasteners	144 in-lbs	243
Intake manifold to head	15-18 ft-lbs	243
Intake manifold to throttle body	35-40 in-lbs	222 purple
Exhaust flange to head	15-18 ft-lbs	Antiseize
Head temp sensor	10-12 ft-lbs	Antiseize
Knock sensor	10-12 ft-lbs	243 blue
Crank position sensor	90-120 in-lbs	243
Spark plug	11-18 ft-lbs	Antiseize
Backplate to throttle body	35-45 ft-lbs	243
Oil filter mount	15-18 ft-lbs	243
Oil filter to mount	½ to ¾ turn after gasket contact	None
Cam nut	60 ft-lbs	243
Pinion bolt	35 ft-lbs	Oil
Oil pump mounting bolts	15-18 ft-lbs	243
Oil pump assembly bolts	100 in-lbs	243
Front engine mount bolts	50-60 ft-lbs	243
Rear engine bolts	50-60 ft-lbs	243
Top engine mount to head	35-40 ft-lbs	243
Inner primary to engine	15-18 ft-lbs	243
Idle control motor	20-24 in-lbs	222
Air temp sensor	6-8 in-lbs	222
Back plate to head bolts	15-18 ft-lbs	243
MAP sensor (hold down)	18-22 in-lbs	222
Air cleaner cover	90-120 in-lbs	243
Rocker arm nuts	30 ft-lbs	272 red
Reed valve screws	10-20 in-lbs	222 purple
Rod bolt	23 ft-lbs, 45°	Oil
Belt cover	90-120 in-lbs	243
Idler sprockets	15-18 ft-lbs	243
Belt tensioner	40 ft-lbs	272
Fuel injector (hold down)	90-120 in-lbs	243
All other ¼-20 fasteners	90-120 in-lbs	243
All other 5⁄16 fasteners	15-18 ft-lbs	243
NOTE: 12 in-lbs equals 1ft-lb.		

Fig. 2-6

117CI X-WEDGE™	
BORE	STROKE
4.125″	4.375″

Fig. 2-7

ENGINE SPECIFICATIONS	
Bore	4.125″
Stroke	4.375″
Displacement	117 CID
Valve sizes	2.000″ intake and 1.605″ exhaust
Pistons	Forged, common front and rear
Wristpin diameter	0.927″
V angle	56.25 degrees
Cam drive	30 mm wide belt with automatic tensioner
Valve train	Hydraulic roller tappet with pushrods
Rocker arm ratio	1.7:1
Crankshaft	Forged and nitrided one piece
Rod type	7.400″ forged, split design 7⁄16″ bolt
Bearing type	Tri metal plain style rod and main
Main bearing journal	2.36″ dia.
Rod bearing journal	2.20″ dia.
Oil system	Dry sump, internal gerotor pump
Induction and Engine Management	2 1⁄16″ throttle body with S&S closed loop VFI
Fuel injectors	34.8 lb/hr @ 3 bar fuel pressure
Compression	9.75:1
Complete engine weight	163 lbs

Fig. 2-8: *Valve Sizes: intake is 2.00" diameter, exhaust is 1.605" diameter.*

VALVE SPRING PRESSURE			
Valve Lift	Closed Lbs	Max. Lift Lbs	Installed Spring Height
.548	80	245	1.970

Fig. 2-9

CAM CHART		VALVE TIMING		VALVE DURATION		VALVE LIFT	LIFT @ TDC	
Cam Name	Recommended Application	Intake Open/Close	Exhaust Open/Close	Intake	Exhaust		Intake	Exhaust
545	Comp Rel.	-11/36	57/0	205	237	.545	.045	.100
548	Original	5/55	57/0	240	237	.548	.115	.100

Fig. 2-10

SPECIFICATIONS AND WEAR LIMITS			
DESCRIPTION		SPECIFICATION	WEAR LIMIT
CYLINDER HEADS	Valve guide in head (tight)	0.0015 – 0.003" (0.0381 – 0.076 mm)	
	Valve seat in head (tight)	0.0050 – 0.0075" (0.127 – 0.190 mm)	
VALVES (fit in guide)	Intake	0.0012 – 0.0020" (0.0304 – 0.0508 mm)	0.0035" (0.0889 mm)
	Intake seat width	0.031" (0.787 mm)	0.041" (0.104 mm)
	Exhaust	0.0017 – 0.0025" (0.0431 – 0.0635 mm)	0.0040" (0.1016 mm)
	Exhaust seat width	0.047" (1.193 mm)	0.057" (0.145 mm)
	Seat width	0.040 – 0.062" (1.016 – 1.574 mm)	N/A
	Stem protrusion	2.190, +0.010, -0.005" (55.626, +0.254, -0.127 mm)	2.230" (56.642 mm)
HYDRAULIC LIFTERS	Lifter fit to guide (loose)	0.0006 – 0.0017" (0.0152 – 0.0431 mm)	0.003" (0.076 mm)
PISTONS	Fit in cylinder (4⅛" bore)	0.0020 – 0.0025" (0.0508 – 0.0635 mm)	0.005" (0.127 mm)
	End gap: top compression ring	0.012 – 0.016" (0.304 – 0.406 mm)	0.026" (0.660 mm)
	End gap: 2nd compression ring	0.020 – 0.024" (0.508 – 0.609 mm	0.034" (0.863 mm)
	Oil control rails	0.025 – 0.045" (0.635 – 1.143 mm)	0.050" (1.27 mm)
CONNECTING RODS	Crankpin bearing running clearance	0.001 – 0.0012" (0.025 – 0.0305 mm)	0.002" (0.051 mm)
	Piston pin fitment in rod	0.0005 – 0.001" (0.0127 – 0.025 mm)	0.002" (0.051 mm)
	Connecting rod side play	0.015 – 0.035" (0.381 – 0.089 mm)	0.040" (1.016 mm)
FLYWHEELS	Runout (shaft at flywheel)	0.0005 – 0.001" (0.0127 – 0.025 mm)	0.003" (0.076 mm)
	End play	0.004 – 0.010" (0.101 – 0.254 mm)	Exceeds 0.015" (0.381 mm)
CAM CHEST	Camshaft endplay (non-adjustable)	0.008 – 0.030" (0.203 – 0.762 mm)	N/A

VFI START-UP

TIP: The VFI module must be loaded with a .H86 operating code and a map designed for your year motorcycle.

1- Follow all initial start-up and break-in procedures.
2- Turn the ignition on and the kill switch to the run position. Listen for the fuel pump pressurizing.
3- Do not apply the throttle.
4- Press the starter button and let the engine crank over—do not apply the throttle. If the engine is extremely hard to start—hot or cold—contact the S&S Tech Line or www.sscycle.com for the location of the nearest VFI Tuning Center.
5- Verify oil pressure and proper circulation while running.

Because every industry has a leader

Engine Components

ROCKER COVERS

The rocker covers on an S&S® X-Wedge™ engine are just covers. They provide no support to the rocker arms or valve train and may vary in style from OE manufacturers, but their only function is to be a cover. It should also be noted that the stock S&S covers are interchangeable between the front and rear cylinder and the hardware used to secure them is all the same.

REMOVAL

1- Remove five 5⁄16 x 18- 1⅞" Allen head fasteners from the rocker covers.

Fig. 3-1

NOTE: *All of the rocker cover fasteners are the same length so they can go on either the front or rear rocker cover in any location.*

2- This is a good time to remove the gasket from the head. Plan to replace the gasket each time the rocker cover is removed.

Fig. 3-2

INSTALLATION

1- Ensure the gasket surface is clean and free of debris or old gasket residue.
2- Position a new gasket on each head.
3- Install the rocker covers and tighten the hardware to 15-18 ft-lbs. using blue threadlock on the threads. Use a star pattern, not a circular pattern.

ROCKER ARMS/PUSHRODS

The rocker arms used in an S&S® X-Wedge™ are stamped steel. They are identical across both cylinders, but we recommend that they be reinstalled in their original position once used. Also, all pushrods are the same length, but we recommend that they be installed in their original position during reassembly.

REMOVAL

NOTE: *Base circle of the cam is when the tappet is at its lowest point of the camshaft lobe.*

1- Verify that the front cylinder is on the base circle of the cams.

2- Loosen the rocker arm nuts and lift the rockers out. Note that there is a rectangular steel channel under the rockers. It is best to remove this and store it with the rocker each time they are removed.

Fig. 3-3

NOTE: *The rocker arm channels are marked F (Front) and R (Rear).*

3- Rotate the engine over to the same position (T.D.C. on the compression stroke) and repeat step 2 for the rear cylinder. The pushrods can be removed at this time.

Fig. 3-4

NOTE: *During disassembly keep track of the original pushrod locations.*

SERVICE

The stock S&S® rocker arm included with a stock S&S X-Wedge™ is a non-serviceable item. There will be some discoloration on initial use, this is normal. Perform a visual inspection, look for unusual wear like deep gouges, galling or extreme discoloration. If any of these are apparent, plan to replace the rocker arm and rocker arm fulcrum.

INSTALLATION AND ADJUSTMENT

1- Pushrods in the X-Wedge are all the same size and length. It is still recommended that they be put back in the place they started, rather than mixing them around.

Fig. 3-5

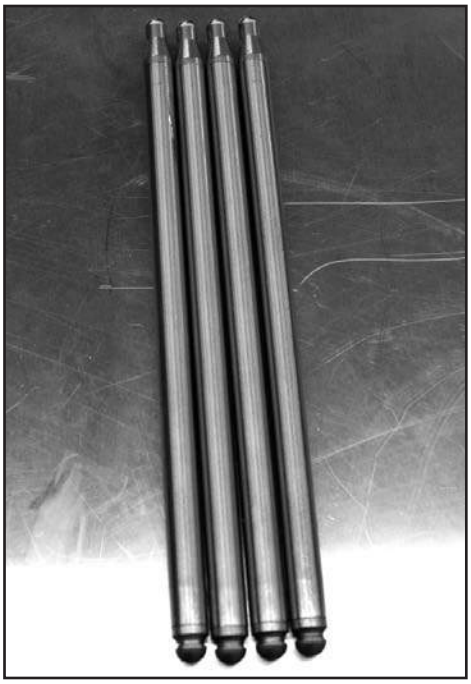

2- Start with one cylinder at T.D.C. on the compression stroke—which puts the tappets at the base circle of the cams. Install the pushrods back in the position they started in. Apply assembly lube to both ends of the pushrod.

Fig. 3-6 & 3-7

⚠ WARNING

Be sure that the pushrod tip is seated in the tappet cup. Severe engine damage may occur if the pushrod tip is not in proper position. Use a light and look down in the hole to verify the position.

TIP: *X-Wedge pushrods are installed with the small diameter tip facing the rocker arm.*

3- Install the rocker channel over the studs. There are front and rear channels with "F" and "R" identifying marks.

Fig. 3-8

4- Insert the rocker arm fulcrum into the rocker and then pass the assembly over the stud in the head. Apply assembly lube to the fulcrum surface and rocker arm tip. Be sure to install the washer under the retaining nut and then tighten the nut to 30 ft-lbs. for valve travel testing.

5- Mount a dial gauge on a secure flat surface as shown in the photo to check for lifter travel. This should be done during the tightening process not when loosening the nut due to interference from dried Loctite® on the threads.

Fig. 3-9

NOTE: *Be sure that the fulcrum is secure and does not move when checking adjustments.*

TIP: It may be necessary to rotate the engine a few times to allow new components (rocker arms, pushrods and lifters) to seat in and give an accurate reading.

6- Ensure that the cylinder you are working on is on the base circle on the cam. Place the indicator on the flat portion of the rocker arm at the pushrod end of the exhaust rocker.

7- Tighten the nut enough to take up the slack but be sure not to put pressure that will move the lifter. Now, slowly tighten the nut to compress the lifter until the nut stops. Your gauge should read between .060"-.080" of travel.

8- Repeat the process for the remaining valves.

9- Repeat for other valve and then other cylinder.

10- Once you are satisfied with the valve adjustment, apply red Loctite® 272 to the threads and tighten it to 30 ft-lbs.

HEADS

1- Remove the rocker covers, rocker arm assembly, air cleaner back plate and intake manifold.

2- Loosen the five head bolts 45-degrees at a time, working in a cross pattern to avoid distorting the head.

Fig. 3-10

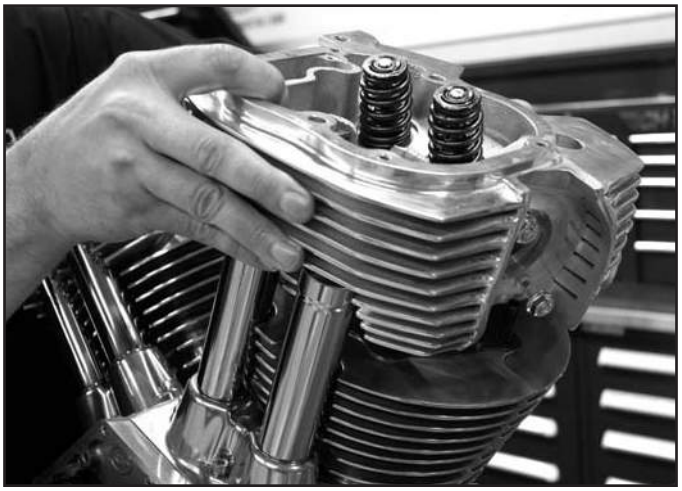

TIP: Removing the oil from the head bolt counter bores using a shop towel will keep oil from running out of the head bolt hole when the heads are removed.

3- If you need to remove the valves at this point, start by mounting the head on a secure work fixture. Compress the spring with a valve spring compression tool to gain access to the keepers and remove them. Be sure to keep the springs, collars and keepers together for use later.

Fig. 3-11

TIP: A magnet will make removing the keepers much easier.

4- Remove the lower spring collar and seal assembly. Check the top of the stem for burrs or grooves that could damage the guide as it comes out.

Fig. 3-12

5- If you are doing general service on the heads you can leave the valve guides in place for now. Refer to the section on valve guide removal and service later in this chapter for more information.

HEAD SERVICE

1- Start by washing the head in warm soapy water to remove surface debris. Next, use a solvent to clean off the gasket surfaces and any stubborn dirt.
2- Remove the excess carbon build-up. Be sure to use caution when doing this and do not damage the material under the build-up affected area.
3- If you find some build-up to be very stubborn, soak the head in Gunk® Hydro-Seal or a similar product.
4- Once the head is clean, give it a thorough final wash with warm, soapy water and then blow it dry with compressed air.
5- Now that the head is clean, check the gasket surfaces for nicks or scratches.
6- Position the head with the combustion chamber facing up and lay a machinist's straight-edge across it. Use a feeler gauge to check the entire gasket surface for warpage. If the warpage exceeds .004", the head will require machining to correct it.
7- Inspect the valve seat for nicks or excessive wear. Refer to Section 2, General Specifications, for limits. It is recommended that the seats be cut on a Serdi type machine.

⚠ WARNING

Always wear eye protection when you are working with solvents, impact tools or compressed air.

VALVE GUIDES

1- Start your inspection of the valve guides by verifying that they are within the service limits. New intake valve-to-guide fit should range between .0012" - .0020", and the wear limit is .0035". New stems measure .3096"-.3104", also .005" oversize valves are available.

Fig. 3-13

NOTE: *Both cast iron and powdered metal valve guides have been used in X-Wedge™ engines. Replacement valve guides are powdered metal and require different machining techniques than cast iron guides.*

⚠ WARNING

Never back a ream out of the valve guide or the bore will be damaged. Work the ream all the way through the bore, disconnect it from its handle and remove the ream through the combustion chamber.

⚠ WARNING

Do not let the head temperature exceed 400 degrees when you are heating it up. Temperatures over 400 degrees can affect the strength of the casting.

2- New exhaust valve to guide fit should fall between .0017" - .0025" and its service wear limit is .0040". New stems measure .3096"- .3104".

3- If replacement is necessary, start the operation by heating the head in a 360-degree oven for one hour.

4- Press the guide out, towards the combustion chamber, using an appropriate sized driver to prevent any burrs or nicks being created in the valve guide bore.

5- Allow the head to cool to room temperature and then measure the guide bore. The standard press fit measurement for a new guide falls between .0015" and .0030".

6- To install a new guide; start by heating the head to 350-degrees for one hour. Next, lubricate the bore with press lubricant and then position the guide. Use a valve guide installation tool to press the new piece into its proper depth as directed by the tool manufacturers instructions.

7- Size the guide to - .001" of the appropriate specification using a valve guide ream. Adhere to the tool manufacturers instructions for best results.

8- Blow the guide out with compressed air and pass a cleaning brush through it a few times.

9- Finally, use a valve guide hone and lubricant to set the desired finish size. Again, clean up the guide with compressed air and a few passes with a brush.

VALVES

1- Start by doing a visual inspection of the valve looking for nicks, burrs and discoloration.

Fig. 3-14

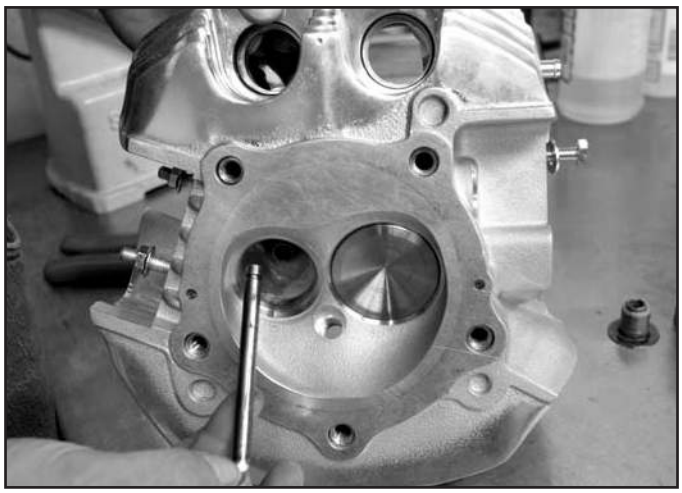

TIP: Intake valve stems measure .3107" +/- .0004". Exhaust valves measure .3100 +/- .0004".

2- If you are going to service the valves and use them again, both (intake and exhaust) should be refaced. Grind the valves on a 45 degree face angle; only remove enough material to clean up the seat only.

3- If a valve doesn't clean up evenly, it may be bent. Replace it.

4- After grinding is complete, thoroughly wash them in warm soapy water to remove any residue.

5- Install the valve to check stem protrusion, it should be between 2.190"+.010"/-.005". If your stem protrusion is excessive, substitute a new valve and check again. At this point, if stem protrusion is still excessive, the valve seats should be replaced. Contact the S&S Tech Department to make arrangements for this service.

VALVE SEAT

1- If the valve guides have been replaced or resized you must recondition the valve seats to make them concentric with the new or refitted valve guide.

2- Reconditioning the valve seats requires a minimum of three different angles.
   - First is the 45 degree seat angle. This is the portion of the seat that contacts the valve and does the actual sealing.
   - Next is the top cut. This is typically a 30 degree angle. This moves the seat angle down and away from the edge of the valve. This is a must to keep the valve from burning. Try to get the seat at least .030" away from the edge of the valve.
   - Finally there is a narrowing angle. This is a 60 degree angle and is used to reduce the width of the 45 degree seat to its specified width.
   - For best results have the seats cut with Serdi® equipment as shown below.

Fig. 3-15

Fig. 3-16

3- After cleaning up any debris created by refacing the valve seat, install the valve to verify stem protrusion. Refer to page 3-9 for information.

Fig. 3-17

4- If the valve seats need to be replaced S&S® strongly recommends returning your heads to S&S for this procedure. Please call the S&S Tech Line at 608-627-TECH for more information.

VALVE INSTALLATION

1- Start by lubricating valve stems with assembly lube and sliding them back into their proper guide.
2- Now install a new valve guide seal/bottom collar. But, be sure to place a protective sleeve over the stem tip before you slide the valve seal over it.
3- Assemble the valve springs and place the top collar on the spring assembly.
4- Position the valve spring assembly on the valve guide seal/bottom collar.
5- Using a spring compressor, position the top collar below the groove in the stem and install the keepers. Remove the spring compressor.

NOTE: *You will need to buy a valve spring height mic to measure installed spring height. Shim the valve height as necessary.*

Fig. 3-18

⚠ WARNING

Always wear eye protection when you are working with solvents, impact tools or compressed air.

TIP: Do not remove the valve after the seal has been installed. It will damage the valve seal.

6- Tap the collar solidly (not excessively hard) with a rubber mallet to be sure the keepers have seated properly.

Fig. 3-19

VALVE SPRING PRESSURE			
Cam Lift	Closed (Lbs)	Max. Lift (Lbs)	Installed Spring Height (In.)
.548	80	245	1.970

VALVE SEAT

1- S&S® strongly recommends sending your heads back into S&S for valve seat replacement. Please call the S&S Tech Line at 608-627-TECH for more information.

VALVE SPRING

The minimum clearance between the top collar and the valve seal is .060" and the minimum clearance to coil bind is .060". Spring installed height is 1.970".

1- Use an appropriate valve spring pressure gauge to test each spring before installing them in your S&S heads.
2- If you detect bind or extreme pressure differences, contact the S&S Tech Line for assistance.

HEAD INSTALLATION

1- Install the locator dowels in the cylinder and place the head gasket in position with the thin side of the sealing ring and printed side facing up.

Fig. 3-20

2- New O-rings are recommended for this procedure. Oil the O-rings as they have a very positive fit in the heads and tappet covers. Remember that the large O-rings go in the heads and the small O-rings go in the tappet blocks.
3- Carefully slide the pushrod tubes into the heads first with a slight twisting motion.

Fig. 3-21

4- Install the pushrod tubes and head assembly onto the engine. Take care to align the pushrod tubes with the tappet covers.

Fig. 3-22

⚠ WARNING

If you torque the heads in an improper sequence, you can cause a head gasket failure.

5- Now put the head into position, but before you install the head bolts, apply a drop or two of engine oil to their threads. This lubrication will ensure you get a proper torque reading in the final tightening sequence.

6- Bolt the heads in place using an alternating star pattern and torque values listed in the diagram below. To ensure you do not distort the heads, please take the time to follow the torque sequence exactly as specified.

Fig. 3-23

⚠ WARNING

Improper first time engine start-up or ignoring break-in procedures, can cause your head gaskets to fail.

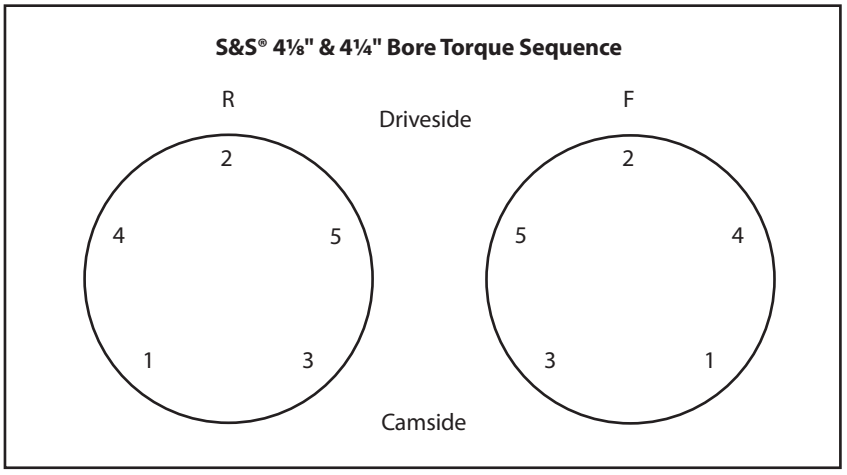

Torque Stages

Stage 1: 8 ft-lbs
Stage 2: 18 ft-lbs
Stage 3: 90 degrees

CYLINDER REMOVAL

1- Remove the rocker covers, rocker arms, pushrod tubes, intake and cylinder heads.

2- Slowly rotate the engine so both pistons are close to T.D.C. and then install S&S® Anti-Rotation Bracket (PN 50-9870) on the sprocket shaft to lock the engine in place. Lift the cylinder off the case high enough that you can see the connecting rods easily.

Fig. 3-24

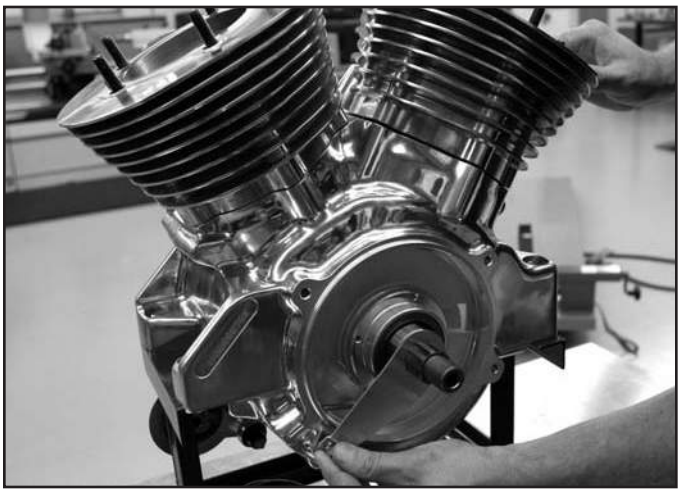

NOTE: *Be sure the piston is at the top of its stroke for this operation.*

3- Use a soft rubber hammer to strike the cylinder directly on the support area of the fins. DO NOT hit the cylinder excessively hard, instead use a series of impacts to loosen the seal at the base gasket.

4- Once the cylinder is loose, begin lifting it off of the crankcase. When the cylinder is high enough off the base gasket surface fill the crankcase opening under the cylinder with clean shop rags. This will prevent dirt or small parts from falling inside the crankcases.

Fig. 3-25

5- Now lift the cylinder straight up and off of the mounting studs. As it gets near the top, be careful not to let the piston fall into the cylinder studs.

6- Once the cylinders are out of the way, slide ½" ID rubber tubing over the studs to protect the pistons and threads.

Fig. 3-26

BORING AND HONING

The boring and honing process is critical to the performance of your engine. It should be done by a qualified machine shop that is experienced with the procedures involved and equipped with a vertical or horizontal boring bar. Always make sure that S&S® Torque Plates and new base and head gaskets are used during the honing operation. DO NOT reuse the gaskets or switch them to another cylinder.

If you or the machine shop you contract are using a vertical boring bar, fixtures will need to be made to mount the S&S Torque Plates.

S&S will bore and hone your cylinders to fit new pistons. Contact our Tech department at 608-627-TECH to make the arrangements.

Fig. 3-27

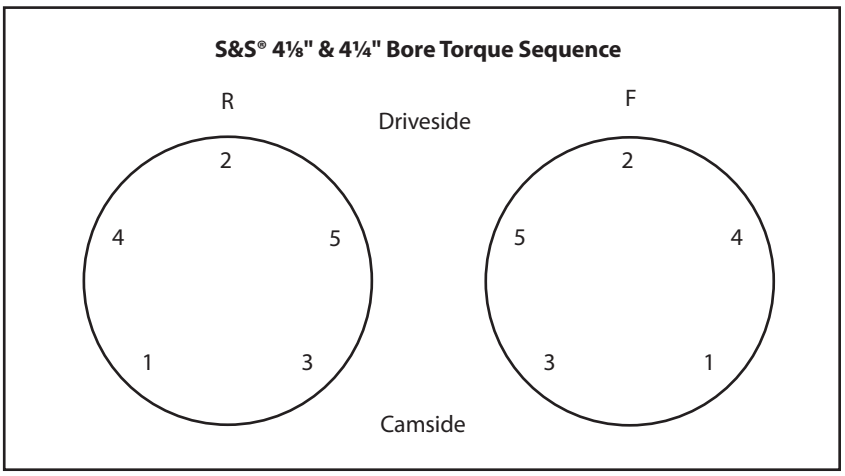

Torque Stages
Stage 1: 10 ft-lbs
Stage 2: 20 ft-lbs

1- Measuring the cylinders for the boring or honing operation must be done as follows. Install new gaskets and then mount S&S torque plates to the cylinder, then turn it upside down so the compounded weight of the cylinder and torque plates isn't focused on the spigot. Take measurements from a few different places in the cylinder to ensure the most accurate readings.

Fig. 3-28

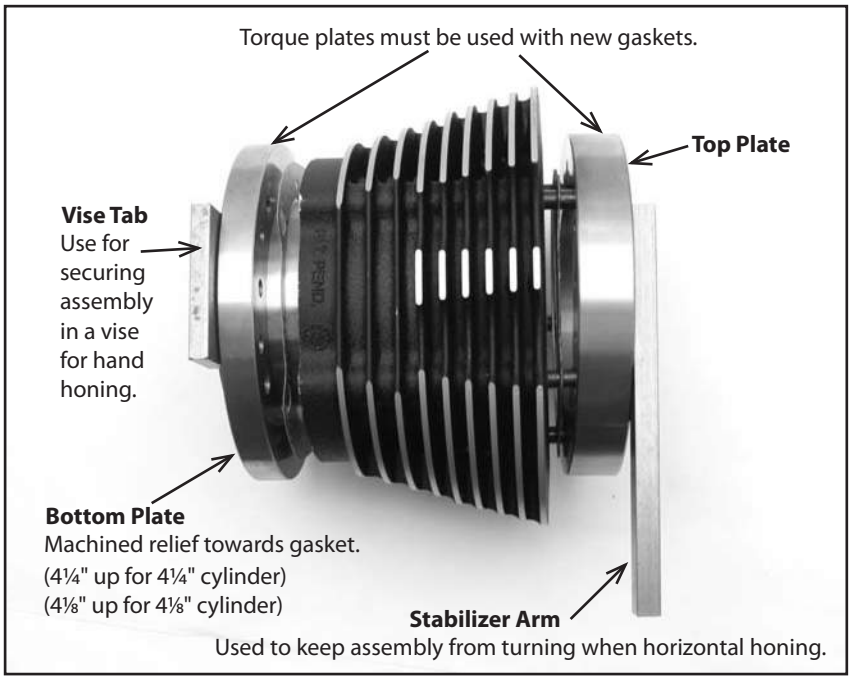

Fig. 3-29

NOTE: *Cylinder size should not be measured any further than the ring travel limits in the cylinder. This is the proper way to place the cylinder on the bench. Do not stand the cylinder on the spigot.*

BORING

S&S® suggests that the boring operation be done at a qualified machine shop that specializes in that type of work. If you do not have a machine shop locally that you can work with, S&S can do it for you in our facility. Contact the S&S Tech Department for more information.

S&S X-Wedge™ pistons are designed to have the finished cylinder bore exactly match the nominal size of the piston. For example, a standard 4⅛" piston should be installed in a 4.1250" bore. Or a .010" over piston would be fit into a 4.1350" bore. The tolerance for the finished bore size is +/-.00025".

1- To determine if your engine is standard or over bored, take a measurement over the piston skirt approximately ½" from the bottom of the piston. This measurement will be approximately .002-.004" under the nominal bore size. Because of the piston skirt coating, it is not possible to measure the piston diameter accurately and use that measurement to determine a finished cylinder bore size.

3- Start the process by sliding a new base gasket and the bottom torque plate over the cylinder. Remember, the bottom plate has two relief cuts. One side has 4.125 printed on it and the other has 4.250. Place the side that correlates with the size you are working with facing up.

4- Measure the cylinder to determine the bore and piston size that you need to go to. If you need to remove any more than .010" of material it is always best to use a boring bar.

5- There are countersunk holes in the top plate that the bolts must go into. Once they are in position, slide a new head gasket over them with the part number printing facing up. Carefully feed the bolts into the cylinder holes and make sure the gasket stays in place.

6- Mount the cylinder on a boring bar fit with a carbide cutter and bore the wall within .005" of your final sizing goal.

HONING

1- S&S® suggests that the boring and honing operations be done at a qualified machine shop that specializes in that type of work. If you do not have a machine shop locally that you can work with, S&S can do it for you in our facility. Contact the S&S Tech Department for more information.

2- Each set of S&S Torque Plates includes a stabilizer arm and vise tab. These will allow you to hone either on a horizontal hone or in a bench vise. S&S recommends that you use a Sunnen AN Series hone or similar tool and follow the manufacturer's instructions.

3- Follow the tool manufacturer's instructions, while aiming towards a 45-degree crosshatch pattern in the end. If you create too steep of an angle it can direct oil flow down the cylinder too quickly which will result in minimal cylinder lubrication. Should your pattern be too flat, oil can build up on the cylinder walls and cause the rings to hydroplane which will increase engine oil consumption.

4- Bore cylinder to .007" +/- .0005" under final bore size. Use a 400 grit stone to hone cylinder to specified bore diameter. Once the final diameter has been achieved, use a 320 grit silicon carbide brush for 20 seconds to plateau hone cylinder surface.

5- Once you have achieved the desired dimensions, the most important step is next; cleaning the cylinder. Wash it with warm, soapy water and then blow it dry with compressed air—but be aware it is still not clean. Both grinding stone and metal particles can be found in the crosshatch pattern cut into the cylinder walls.

6- Finalizing the cleaning process can be done three ways. One is to lubricate a clean white rag with engine oil and wipe the walls until the rag no longer traps any dirt on the material. Another option is to use Carb Cleaner or Brake Clean to wipe out the cylinder walls. If you choose the second method, be sure to lubricate the cylinder walls with oil immediately after the cleaning process is finished. And, of course, you can clean it with warm soapy water.

7- The following photos illustrate the various types of machinery that can be used in the honing process. Keep in mind the best results will come from a vertical hone versus a horizontal method. The reason behind that is simply that the weight of the honing apparatus is subject to gravity pulling it to the lowest part of the horizontally mounted cylinder. Proper results can be achieved during a horizontal honing process, but great care should be taken to avoid a slightly out of round hone from the effects of gravity.

Fig. 3-30 & 3-31

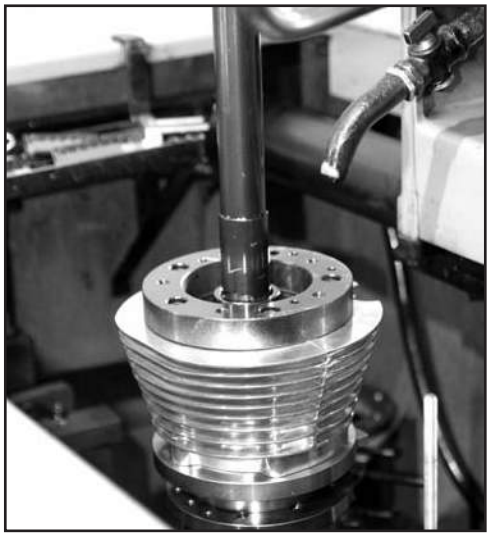

Fig. 3-32

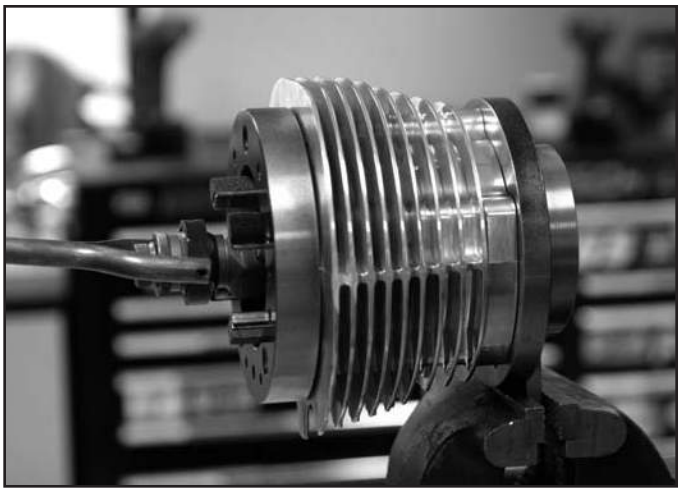

INSTALLATION

1- Start by cleaning the cylinder to ensure all dirt and debris are off the wall and gasket surfaces. Washing with warm soapy water, rinsing and then blow drying with compressed air is the first step. Next, use a clean rag and some oil to wipe the cylinder wall until no more dirt shows up on the rag.

2- Install a new, dry base gasket. Next, wipe the cylinder alignment dowels off with a clean rag and some lubricant before they are installed.

3- Apply a light coat of oil to the piston skirt and ring area and then slide a ring compressor in place. Remove the rubber tubing covering the cylinder studs.

4- Carefully slide the cylinder over the studs and into position above the ring compressor. Slowly slide the cylinder over the ring compressor and allow the piston to move upwards in the bore. Removal of the ring compressor is based on the brand you are using—please refer to the instructions included with the tool. Install a new head gasket and move onto the head.

Fig. 3-33

TIP: Set piston approximately ½ stroke and start the cylinder on the studs before installing the piston in the cylinder.

PISTON REMOVAL

The pistons in an S&S® X-Wedge™ production engine are both the same, front and rear. While they can be interchanged when new, we recommend that they be reinstalled in the cylinder that they came from after the engine has been run.

Fig. 3-34

1- First, cover the cylinder studs with rubber tubing to protect the threads as well as the piston. Then make sure the crankcase opening is filled with clean shop rags to prevent any debris or parts from falling inside.

2- Remove the wristpin clip with a proper tool for the procedure, then discard the clip. Do not try to pry it out with a screwdriver or pick. Using an improper tool may damage the pin bore and make it hard to remove the pin.

Fig. 3-35

NOTE: *The wristpin clip must be accessed from the cam side of the engine due to the five-stud design of the X-Wedge.*

⚠ DANGER

Wristpin clips are held in by spring pressure and they can fly off the installation tool causing eye damage. Be sure to wear safety glasses when working with them.

3- Remove the wristpin either by pushing it through or, if you feel any resistance, use a wristpin pulling tool. Do not try to force it or drive it with any other tools.

4- When removing the piston, take care not to put any pressure on the cylinder studs.

RING REPLACEMENT

1- Start by inspecting the piston (new or reused) around all of the machined surfaces and passageways looking for burrs or chips. If you find any material that must be removed, be sure that you clean it from the piston.

2- Next, wash the pistons in warm soapy water and rinse them thoroughly. Pay extra attention to the oil passageways and then pass a clean white cloth through the wristpin bores. Finalize the cleaning by drying the pistons with compressed air.

3- Install the wrist pin clip on the sprocket shaft side of the engine.

4- Slide the rings in approximately ½" and then use a caliper to measure all the way around to ensure the depth consistency.

5- When you measure the piston ring end gaps, be sure to use the cylinder designated for that specific piston. The compression rings should have a gap that falls in between .012" - .016" top ring and .020 to .024 second ring. Your oil ring rail end gaps should fall into a range of .025" - .040". If you need to remove material to achieve proper gap, use a grinder designed specifically for piston ring sizing.

TIP: *Be sure to deburr the rings if you have to grind them to size.*

6- Do not size the oil rails. If they are not the correct fit please contact the S&S® Tech Line.

7- Position the rings on the pistons while they are still on your workbench.

8- Install the oil expander first, DO NOT attempt to size it as it must be installed as delivered. Carefully install the expander by hand taking care not to scratch or scrape the piston surface. Install the lower and upper scraper rings next.

9- Install the second compression ring next with the chamfer facing down or with the markings facing up. Use a high quality piston ring installer for this operation.

10- Install the top compression (chrome faced) ring next with the chamfer facing up or mark up.

11- Lubricate the wristpin, bushing and bore in the piston skirt with assembly lube. Position the piston on the rod, slide the wristpin in place and use an installation tool to lock the clip in place.

12- After the piston is installed, position the rings in accordance with the following diagram.

Fig. 3-36

TIP: *S&S® recommends using new clips each time a piston is installed.*

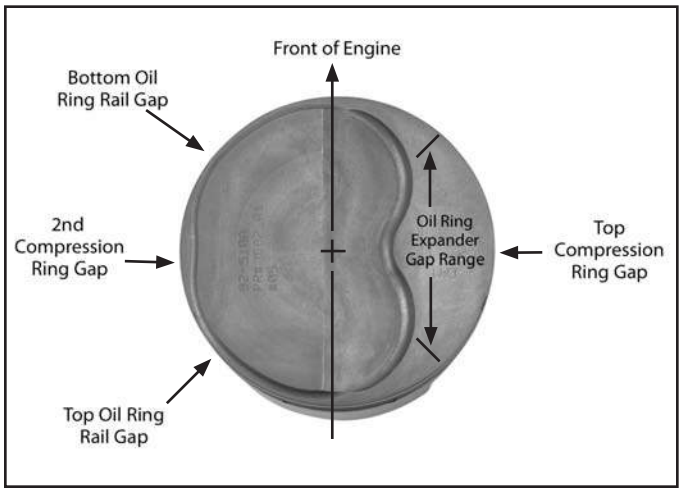

First (Top) Ring: 0.012-0.016"
Second (Middle) Ring: 0.020-0.024"
Oil Ring Rails: 0.025-0.040"

PISTON INSTALLATION

TIP: *The majority of ring compressors are designed for automotive applications. If you are using this type remember to reverse the arrow orientation.*

1- Apply a light coat of oil to the piston skirts and the ring set prior to installation in the cylinders. Use an appropriate sized ring compressor to position the rings for installation after applying lube to them.

2- Be sure a new base gasket has been installed and then, carefully slide the cylinder down over the ring compressor following the tool manufacturer's instructions on this operation.

CASE DISASSEMBLY

S&S® Cycle offers crankcase rebuilding. Contact your nearest dealer or the S&S Tech line at www.sscycle.com or 608-627-TECH.

1- Start disassembly by securing the engine in a stand that is attached to a workbench or shop cart.

2- Remove complete top end including rockers, heads, cylinders and pistons following the guidelines created earlier in this manual to access rods and cases. Pushrods, tappet covers, tappets and the oil pump should be removed at this time.

3- Remove the breather fitting from the top of the crankcase to gain access to the center case bolt.

   a- Remove the case bolts. A unique feature on the X-Wedge™ is that all of the case bolts are the same size and length. Inspect them on removal for surface oxidization and clean them up if necessary.

Fig. 3-37

4- It is not necessary to remove the crank position sensor when simply disassembling the cases.

5- We suggest you place the left side case in a support—like a coffee can with a rubber fuel line lip—to protect the sprocket shaft during assembly and disassembly.

6- Separating the case is accomplished by using a threaded rod and two nuts as seen in the photo below. By turning the nuts outward, they will force the case apart in a safe way, with no damage to the sealing surface. Use this method on both sides of the case.

Fig. 3-38

NOTE: *It is best to do this at the rear motor mount area. This is one of the strongest portions of the crankcase.*

7- Carefully lift the case half off, but be sure not to lift it by the cylinder studs.

Fig. 3-39

8- The crankshaft assembly will lift out of the case, pressing is not required. Be sure to carefully lift the flywheel assembly straight up and out so you do not to nick the bearings with the sprocket shaft.

Fig. 3-40

BEARING SERVICE

The X-Wedge™ uses a plain bearing system that has proven to be very reliable. Installation and removal are straightforward, but do require an arbor or hydraulic press and the use of S&S tool 106-0718. If you don't use this tool, oil passages may not line up correctly and the bearings may be damaged.

Fig. 3-41

REMOVAL

__NOTE:__ The bearings press out from the outside of the case to the inside.

1- Wash the cases.
2- Start by heating the cases in an oven to 250 degrees to make pressing the bearing out easier.
3- The plain bearings are a two-piece design on both case sides.
4- Position the 250 degree case in an arbor press and use S&S tool 53-0400 of the 106-0718 kit to press the old bearings out.

Fig. 3-42

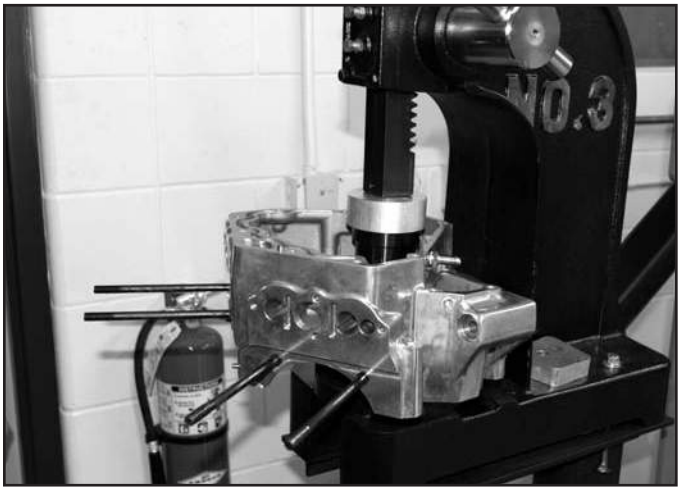

⚠ CAUTION

Do not press on the dowel pins at the parting surface of the case.

5- Inspect the case bore for nicks, scratches and burrs. Use a bore gauge to check the surface measurement. It should measure between 2.5183" and 2.5177".
6- Clean the cases using a solvent tank and then rinse them in warm soapy water to remove the solvent residue. Once the case is clean, use compressed air to final dry it.

INSTALLATION

1- Bearing installation is the same on both cases.

2- Clean the bearing bore surface and assure there are no nicks, scratches or gouges in the material, then heat the cases up to 250 degrees to make pressing the bearing in easier.

Fig. 3-43

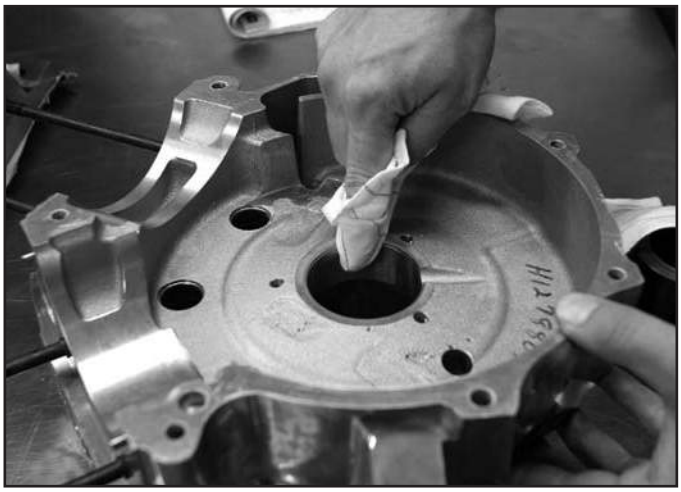

3- Position the case on an arbor press with the crankshaft cavity facing up. The S&S® Bearing Installation Tool 53-0401of the 106-0718 kit has alignment marks and an oil feed alignment hole to help situate the bearings for installation. It also recesses the bearing to its proper depth. The case is marked to show the oil feed alignment hole and bearing split line also.

Fig. 3-44 & 3-45

4- The bearings press in dry—be sure no lubricant is put on the case bearing surface of the new plain bearing prior to installation.

Fig. 3-46

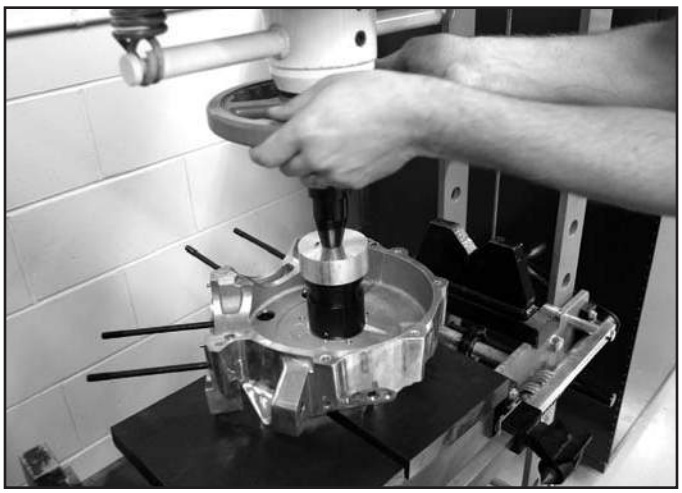

⚠ CAUTION

Do not press on the dowel pins or cam chest surface.

5- Verify that the oil feed hole pocket in the case and the oil feed hole in the bearings are aligned properly.
6- Repeat process for other case half.

CYLINDER STUD INSTALLATION

1- Make sure the threads of the stud are clean.
2- Apply Loctite® 272 on the shouldered end of the stud.
3- Use a stud installation tool like the MAC MN08-0148 to install the studs and torque them to 10-ft-lbs.

REED VALVE INSTALLATION

1- Install the reed valve petal, it lays in place.
2- The reed valve stop has no alignment process thanks to the two installation holes.
3- Apply Loctite® 222 purple on two reed valve screws and tighten to 10-20 in-lbs.

Fig. 3-47

4- Install a new reed valve chest gasket and the chest cover. Use Loctite 242 blue on the three screws and tighten to 90-120 in-lbs.

CASE ASSEMBLY

Use caution while installing the crank assembly to assure you do not damage the bearing surfaces.

1- Position the sprocket side case half in a support that will allow proper clearance to protect the sprocket shaft.

2- Liberally apply assembly lube to all of the bearing and thrust surfaces on the crank assembly and the case half.

Fig. 3-48

3- Take a moment to align the connecting rods in their respective positions—cam side goes to the front cylinder and sprocket shaft side for the rear cylinder. Install Bearing protector S&S® PN 106-2859.

Fig. 3-49

4- Slide the crankshaft assembly into the case, taking care not to allow the bearing surfaces to get scratched or damaged.

Fig. 3-50

5- Wipe crankcase parting surface to remove any oil residue with lacquer thinner or brake clean.

6- Spray an even coating of Loctite® 7640 primer on both case half sealing areas. Allow it to stand for about five minutes. Install a new O-ring around the front dowel tube at the parting surface.

Fig. 3-51

7- Apply a generous, even bead of Loctite® 515 on the case half sealing area. Do not attempt to use other sealants—testing done with other sealants has confirmed leaks with these products.

Fig. 3-52

NOTE: *Loctite® 515 is required. Testing of other sealants has resulted in inconsistent case sealing.*

8- Prepare the cam side case by applying assembly lube to the bearing surface. Apply assembly lube to the flywheel assembly bearing surface also.

Fig. 3-53

9- Place the case in position and install the seven case bolts with Loctite® 243.

Fig. 3-54

NOTE: *The case bolts are the same size and length so placement doesn't matter.*

10- Follow the torque sequence shown below and tighten the bolts to 15-18 ft-lbs. Wipe off excess sealant after torquing.

Fig. 3-55

11- Verify that the flywheel assembly rotates freely.

Fig. 3-56
Case Bolt Torque Pattern

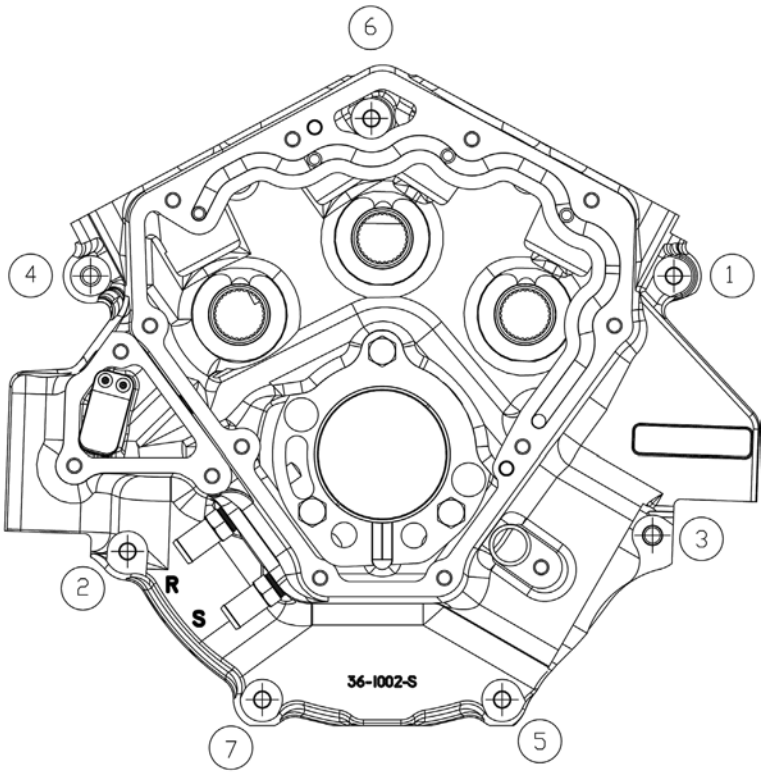

CRANKSHAFT ASSEMBLY

Rod Bearing Service

1- Once the cases have been separated (see case section), the crankshaft assembly can be lifted out. It is recommended you work with the crankshaft in the S&S® Flywheel fixture PN 106-0552.

Fig. 3-57

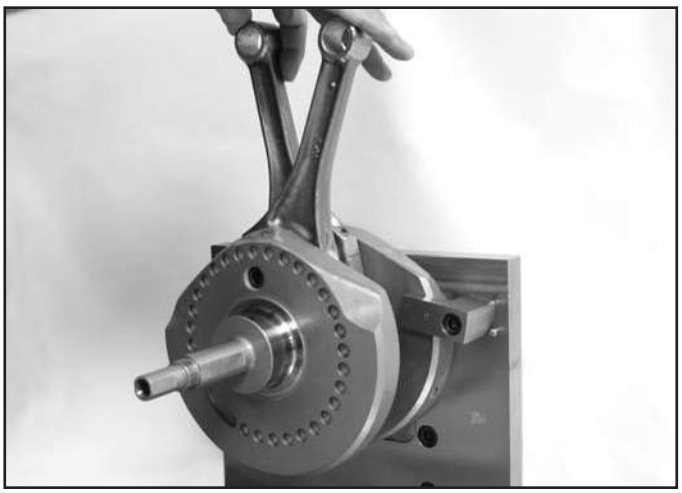

NOTE: *Check rod side clearance with a feeler gauge—should be between .007"- .019".*

2- Use a felt-tip marker to identify each rod and cap assembly so that they stay together in the reassembly process. Loosen all four rod bolts before taking either rod completely off—this will help prevent twisting or damage. Carefully remove the rods by unscrewing the bolts and removing the cap. Be sure that you do not nick or scratch the crankshaft bearing surface.

Fig. 3-58

⚠ CAUTION

Be sure to keep the rod and the cap assemblies together. You marked them in the step prior.

3- Start the service procedure by inspecting the crankshaft bearing surfaces for nicks, scratches, burrs and irregularities. Use a soft, clean white rag to help look for defects in the surface.

Fig. 3-59

TIP: S&S® X-Wedge™ rods are machined as a set. The top and bottom are a matched set that should not be mixed with other rods. Also, remember that the chamfer on the rod is always positioned towards the corresponding flywheel.

4- Inspect the bearing insert inside the rod halves.
5- To remove the old bearings push on the non-tab side of the bearing. The bearing will slide out in the channel it is mounted in.

Fig. 3-60

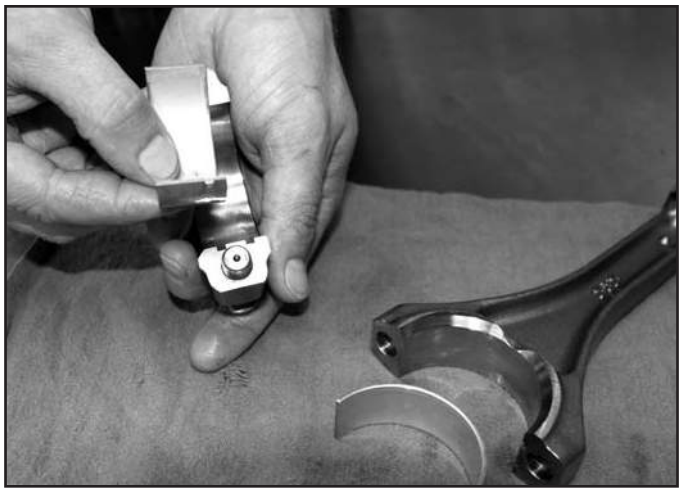

6- Inspect the rod and cap surfaces for nicks, scratches and chips. Thoroughly clean the surface using a clean white rag and then inspect to ensure there are no hidden irregularities.
7- Treat the new bearings like eggshells when you remove them from their packaging. Be delicate and be sure to place them on a clean surface.
8- Slide the new bearings in place dry. They align in the channel found in the rod and rod cap and slide in until they are flush with the mounting surfaces.

9- You must inspect the bearing-to-crankpin clearance. To do this you will need a strip of Plasti-Gauge. Follow the manufacturer's instructions for cutting a small piece and then place it on the crankshaft assembly.

Fig. 3-61

10- Install the rod and position the rod cap over the Plasti-Gauge. Apply oil to the threads and under the head of the bolt, tighten to 23 ft-lbs., then turn the bolt an additional 45 degrees—this can be measured by using the MAC Tools® Torque Angle Meter PN TM281 or a similar tool.

Fig. 3-62 & 3-63

⚠ CAUTION

Make sure the rod does not rotate with the Plasti-Gauge installed.

11- Loosen the rod bolts and use the gauge included with the Plasti-Gauge to determine your clearance. It should fall in the range of .0009" to .0033. Remove all Plasti-Gauge from the crank and rod surfaces.

Fig. 3-64

12- Lubricate the crank assembly and the bearings with assembly lube and install the rods. Make sure the bearing shells are aligned with the rod and cap split line. Remember the chamfer goes towards the crankshaft thrust surface (outside). Inspect the rod bolts for wear or damage—they can be reused if no defects are found.

Fig. 3-65

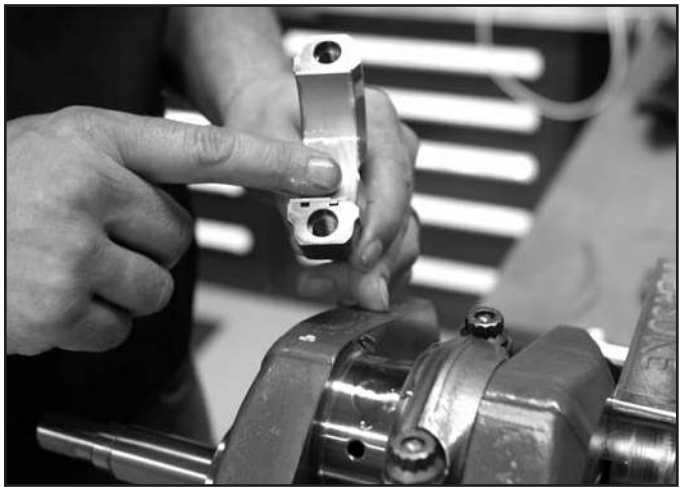

PUSHROD TUBES REMOVAL

1- The pushrod tubes can only be removed when the cylinder head is off.
2- When removing the pushrod tube from the tappet cover, it will require a solid pull to come out of the O-rings.

INSTALLATION

1- New O-rings are recommended for this procedure. Oil the O-rings as they have a very positive fit in the heads and tappet covers. Remember that the large O-rings go in the heads and the small O-rings go in the tappet blocks.

Fig. 3-66

2- Carefully slide the pushrod tubes into the heads first with a slight twisting motion.

Fig. 3-67

3- Install the pushrod tubes and head assembly onto the engine. Take care to align the pushrod tubes with the tappet covers.

PUSHRODS

When you remove pushrods from an X-Wedge™ engine, be sure to mark their original location for reinstallation. If you are replacing pushrods, see information on fitting them below.

Fig. 3-68

TAPPET REMOVAL

TIP: To remove all the tappet screws the cylinder must be removed.

(Option A—With the Cylinders and Heads Removed, but Camchest Closed)

1- The tappet covers are the same for front and rear cylinders. They are held in by four ¼ x 20 bolts and lift off after you remove the pushrod tube covers.

Fig. 3-69

TIP: A magnet may be required to pull the tappets out, or rotate engine to lift tappets.

2- To remove the tappets, first remove the anti rotation pins and then slide the tappets out. All four tappets are the same, but it is recommended that they be put back in their original position.

⚠ CAUTION

The tappets are free to drop out of bores when removing the intermediate cam cover. Use caution so tappets don't get damaged by dropping on the bench or floor. Magnets may be used from above to keep the tappets in place.

Option B—Open Camchest

1- If the camchest is open and the intermediate cam plate assembly has been removed, you can remove the tappets through the cam chest without removing any top end components.

TAPPET SERVICE

There is no actual service to be performed on the tappets. Each opportunity that you have to inspect them, verify there are no marks indicating damage and that the rollers operate smoothly.

TIP: If a tappet is found to be damaged or needs to be replaced for any reason, replace the entire set of four.

The valve train on an X-Wedge™ is significantly different than other v-twins. Testing has found that tappet life is greatly increased on the X-Wedge. There is no scheduled maintenance required.

TAPPET INSTALLATION

1- It is important to replace the tappet cover gasket each time the tappet cover is removed.
2- Lube the tappets with assembly lube or soak them in clean 20-50 oil. Slide them into the tappet bores.

Fig. 3-70

NOTE: *Tappet oil feed hole indexing is not required.*

3- Align the anti-rotation pin. Verify the tappet moves freely past the pin (up and down). If the tappet binds, rotate the tappet 180 degrees in the tappet bore and verify movement again.

Fig. 3-71

4- Install the new gasket and tappet cover to its original position. Apply some blue 242 threadlock and then tighten the ¼ x 20 bolts to 90-120 in-lbs.

CAM BELT DRIVE

The belt can be changed without taking any valve train items off—but it is much easier with the rocker arms removed. This is the recommended way of changing the cam belt. The installation procedure can be used to replace a failed belt while away from a shop.

The X-Wedge™ engine is a free spinning engine. If the belt fails, no additional engine damage will occur.

BELT REMOVAL

1- Remove the belt cover.

Fig. 3-72

TIP: A broken belt can be a sign of a stuck valve.

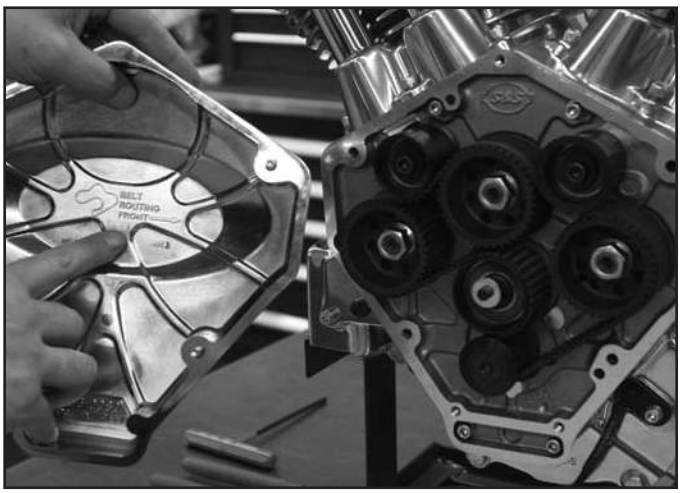

2- Rotate the engine until the timing pin locations on all three cams (marked with white circles below) line up with their corresponding holes in the intermediate cam cover. The FTDC mark will align with the notch in the pinion sprocket.

Fig. 3-73

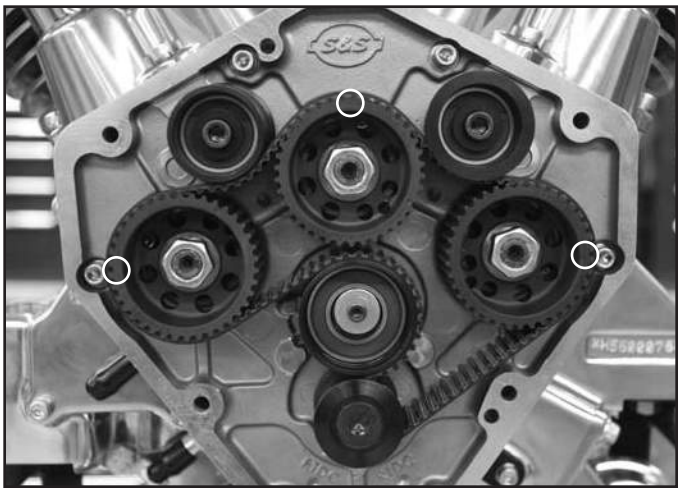

3- Remove the pinion bolt and washer using a TP45 tool.

4- Insert the 3⁄16″ diameter dowel pins into the cam sprocket timing holes. You may need to rotate the cams to achieve alignment.

Fig. 3-74

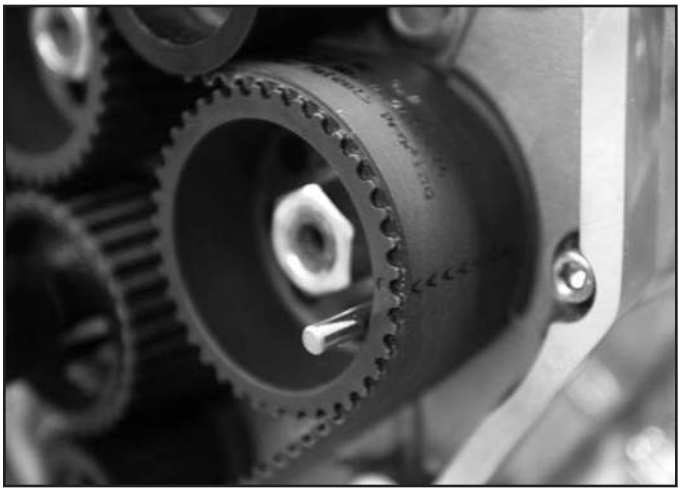

5- Use the special S&S® socket PN 106-0750 or an 11⁄16″ wrench to take the tension off the cam belt tensioner. Once it is fully relieved, you can use a bolt in the lower intermediate cam cover mounting area to hold the wrench or ratchet in place.

Fig. 3-75 & 3-76

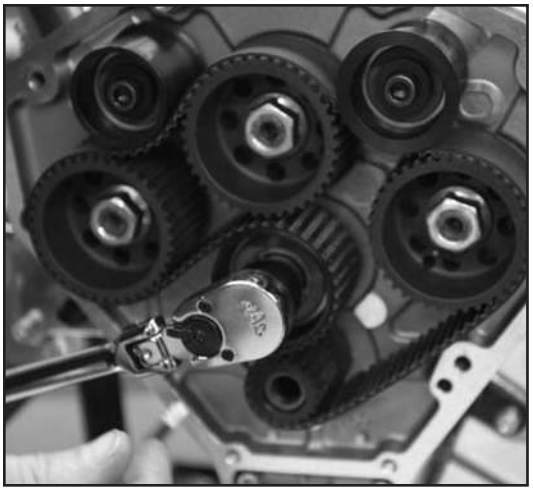

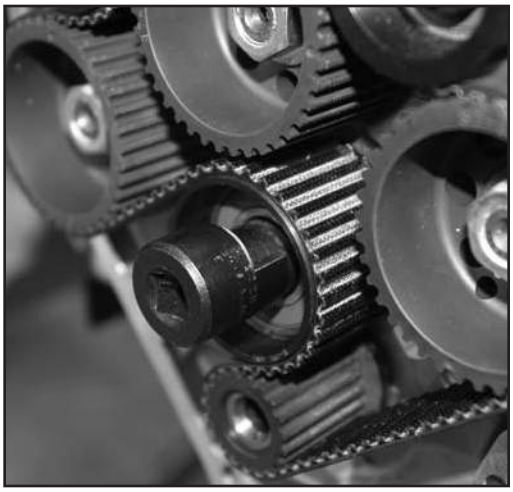

NOTE: *Belt cannot be installed after the pinion bolt and washer are installed.*

6- Remove the two idler sprockets at the top of the intermediate cam cover. Note their orientation—the rear has a bevel facing the intermediate cam cover and the front faces away.
7- Slide the belt off.

Fig. 3-77

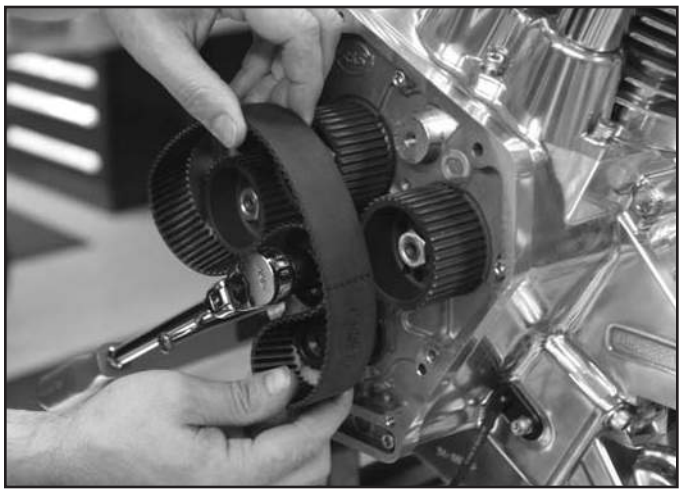

TIP: The belt can be held to the cam sprockets using a clothes pin or paper clamp to ease installation.

BELT INSTALLATION/ REPLACEMENT

⚠ WARNING

Do not bend the belt tighter than the size of the sprockets. Do not twist the belt, crimp or crease it.

TIP: The belt installation routing diagram can be found inside the timing belt cover.

1- Installation of a new belt is simple, but requires the use of S&S® Cam Alignment pins for each of the three cams.
2- Make sure the tension is removed from the belt tensioner.
3- Rotate the cams until they are positioned over their alignment holes and then insert the pins.
4- Next, rotate the engine to FTDC and align the timing mark.
5- Pass the belt around the cam sprockets—there is a diagram of the belt and its installation pattern inside the cam cover. The belt should be orientated so that you can read the words on the belt when installing it.
6- Install the idler sprockets noting their orientation. The rear sprocket has a bevel facing the intermediate cam cover, the front one faces away. Torque to 15-18 ft-lbs.
7- Remove the alignment pins.

Fig. 3-78

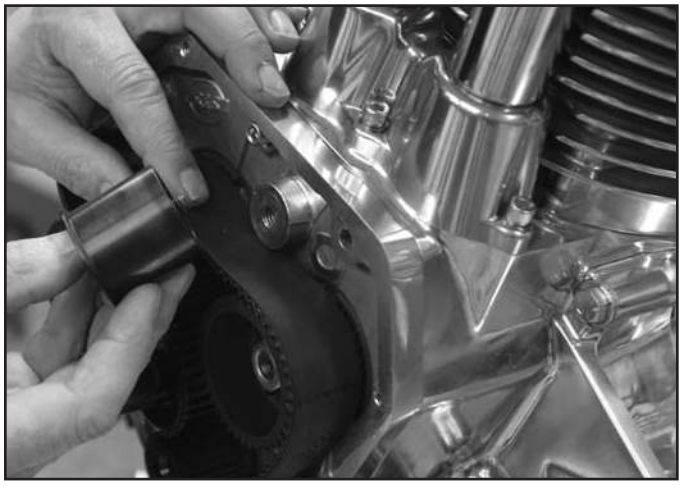

NOTE: *If you do not have S&S Cam Alignment Pins, Gates marks the belt with alignment points on its edge. Align the belt marks with the cam alignment holes or use 3⁄16" dowels.*

NOTE: *Belt installation can be done with rocker arms in place if pins are used, but it is easier to do with the rockers loosened.*

8- Once you have everything aligned, release the pressure on the belt tensioner.
9- Oil the pinion bolt and torque to 35 ft-lbs.
10- Install a new gasket and replace the cam cover. Torque the ¼-20 bolts to 144 in-lbs. with Loctite® 242.

CAMS

Standard & Compression Release

The S&S® X-Wedge™ is a three-cam design engine. It features a common intake and two separate exhaust cams. The intake cam is located in the center and has two lobes. The exhaust cams feature one lobe and compression releases. The front exhaust cam has its lobe located closed to the cam plate (outward). The rear exhaust cam has its lobe located the furthest from the cam plate (inward).

Compression Release Cams

S&S has developed a unique product to assist with starting with a compression release cam. The premise is simple, at cranking RPM, a spring loaded lever holds the exhaust valve open slightly while the engine turns over, lowering compression. Once the engine fires and RPM exceeds 500 RPM, centrifugal force takes over and sends the lever to a retracted position, allowing the exhaust valve to seat fully.

Fig. 3-79 & 3-80

NOTE: *With the S&S Compression Release Cams in your bike the measured compression will be lower than standard engines. If you have any concerns with cylinder pressure perform a standard leakdown test.*

There is no service required on these cams. If you have the cams out of the bike for any reason, verify that the lever operates smoothly and do a visual inspection or any debris that may prohibit smooth operation.

⚠ CAUTION

Do not substitute a standard Torx® T45 in place of the Torx Plus TP45.

1- Remove the rocker cover, rocker arms and pushrods. Record their positions.
2- Follow the belt removal instructions and remove the cam belt drive.
3- Remove the pinion sprocket bolt using a Torx® Plus 45 (TP45) tool. Place bike in low gear and hold rear brake to loosen. Use an impact tool or wrench. Now remove the pinion sprocket using a small 2-jaw gear puller.
4- Use magnets to hold the tappets up (if still in place).

Fig. 3-81

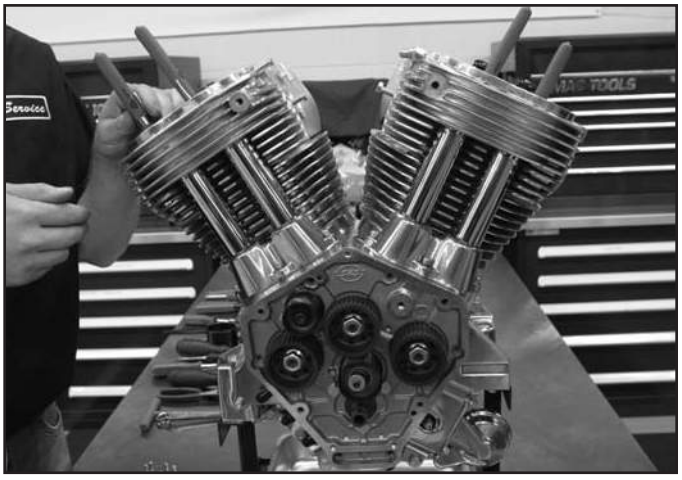

5- Loosen and remove the intermediate cam cover assembly. Place the intermediate cam cover on a flat surface protected by a clean rag.

Fig. 3-82

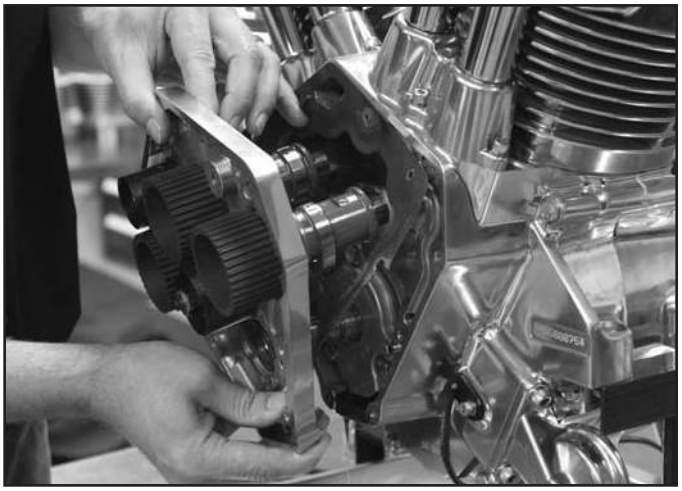

NOTE: *A small drain pan will be required as oil from the cam chest area will be present when cover is removed.*

6- The back side of the cams have flats that will fit a 1⅛" wrench and the front side of the cam has a nut on it. Loosen the nut by holding the cam still with a wrench on the back side. Now use an arbor press to remove the sprocket from the cam and now the cam can be removed from the plate by pressing on the end of the cam shaft.

Fig. 3-83 & 3-84

NOTE: *Use caution throughout this process to avoid damaging the camshaft lobes, camshaft plate bearings and the gasket surfaces.*

SERVICE

The cam bearings should be inspected each time you have the cams out. The cam seals should be replaced every time the cams are removed from the camshaft support plate.

CAM BEARING REMOVAL

1- Remove the cam bearing seals.
2- To remove the cam bearing use and arbor press and appropriate size tool. Be sure to support the intermediate cam cover evenly to prevent distortion during the pressing out stage. Be sure that you are pressing the bearings out from the cam chest side of the plate.
3- Inspect the bearing surface of the intermediate cam cover after removal of the bearings. If bores are damaged cam plate replacement is required.

CAM BEARING INSTALLATION

1- Be sure the bearing surfaces of the intermediate cam cover are clean and free of gouges or scratches. An arbor press is required for this procedure.
2- Clean all cam bearings to remove rust preventative before installation.
3- Be sure to press from number side of bearing from the cam chest side of the plate.
4- Align bearing to ensure straight installation into bore and press until they are .035" - .045" below the bore surface.
5- Verify the needle bearings rolls smoothly. Apply assembly lube to all bearings and seal surfaces.
6- Install the seals flush with the face of the intermediate cam cover.

CAM INSTALLATION

Standard & Compression Release

1- Install key into camshaft (S&S® recommends the center cam first—but you can start with any cam). Install the cams and sprockets in the following order: Intake, front exhaust, rear exhaust.

Fig. 3-85

NOTE: *The X-Wedge® engine uses three different camshafts, one intake and two exhaust. The intake cam has two lobes and is located in the center. The exhaust cams contain the compression release features. The front exhaust cam has the lobe located closest to the cam plate (outward). The rear exhaust cam has the lobe located the furthest from the cam plate (inward).*

2- Slide camshaft through the bearing and seal carefully to prevent damage to the seal.
3- Align and install sprocket onto camshaft. Make sure timing marks on sprockets are facing outwards.
4- Apply Loctite® 242 (blue) to the threads of the camshaft nut.
5- Hold back side of the camshaft with a 1⅛-inch wrench letting the wrench rest against the bench surface.
6- Install the camshaft nut and torque clockwise to 60 ft-lbs.

7- Verify the camshafts rotate freely and add a coat of assembly lube to all cam surfaces.

Fig. 3-86

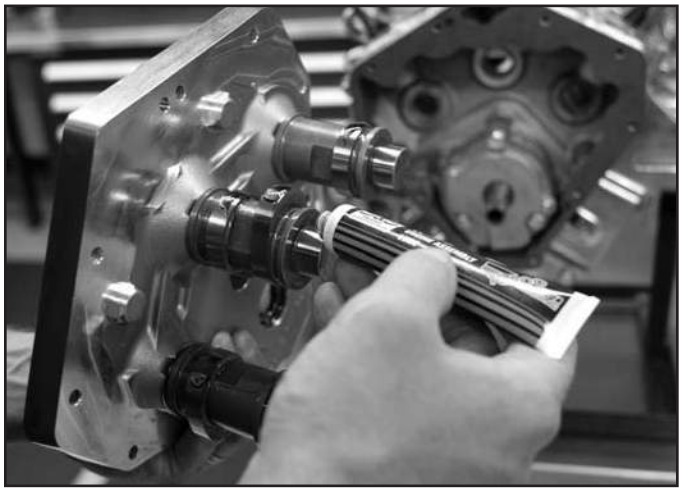

8- Install new camchest gasket.

Fig. 3-87

TIP: Before installing the intermediate cam cover, apply a coating of high-temp wheel bearing grease to the inside of the pinion seal.

TIP: Position all four cam lobes toward the center of the intermediate plate before installing on to the crankcase to aid in clearing the rollers on the tappets.

9- The intermediate cam cover can now be installed onto the crankshaft and crankcase—be sure not to damage the pinion shaft seal.

10- Treat the six ¼-20 intermediate cam cover fasteners with blue Loctite® 242 and torque to 90-120 in-lbs.

Fig. 3-88

NOTE: *The tensioner is a non-service item and should be replaced as a unit.*

11- Install the cam belt cover with a new gasket. Treat the ¼-20 fasteners with blue Loctite 242 and torque to 90-120 in-lbs.

BELT TENSIONER REMOVAL

1- Follow instructions in the cam removal section to remove the intermediate cam cover from the engine.
2- Using soft jaws, clamp the plate in a vise.
3- With the plate secure in a vise, heat the area around the belt tensioner to breakdown the Loctite.
4- Rotate the tensioner stud clockwise for removal.

INSTALL BELT TENSIONER

1- Apply red Loctite 272 to threads of belt tensioner.
2- Thread the tensioner assembly into the intermediate cam cover. Working from the inside of the intermediate cam cover, turn the tensioner stud counter-clockwise using a T-50 Torx driver until it is nearly seated.
3- Align the spring locating tab into the groove on the intermediate cam cover.
4- Torque the tensioner to 40 ft-lbs.

PINION SPROCKET INSTALL

1- Be sure the engine is at top dead center front (TDCF) cylinder.

Fig. 3-89

TIP: It is possible to install this 180° off. Be sure the dot matches the mark on the sprocket and front piston is at TDC.

2- Slide the sprocket over the pinion shaft. You must align the notch on the sprocket to the dot on the crankshaft and the FTDC mark on the intermediate cam cover. Make sure that the front piston is at TDC!
3- Apply oil to the threads of the head of the bolt.
4- Do not apply Loctite®.
5- Slide washer onto bolt. Tighten bolt and washer to crankshaft by using TP45 (Torx® Plus 45). Torque to 35 ft-lbs.

Because every industry has a leader

Oil Pump

The oil pump in the X-Wedge™ is a gerotor style pump. It has no serviceable parts and is assembled as a unit prior to installing it in the engine. There are no maintenance, service or tuning steps with this oil pump. You can use this section for teardown and assembly with new parts. Additionally, you can purchase a new factory assembled oil pump that can be installed with just three bolts.

REMOVAL

1- In order to access the oil pump, you must first refer to the Engine Components section for the proper procedure for removing the intermediate cam cover.

2- With the intermediate cam cover successfully removed, take out the three 5⁄16" bolts that fasten the oil pump to the crankcase.

Fig. 4-1

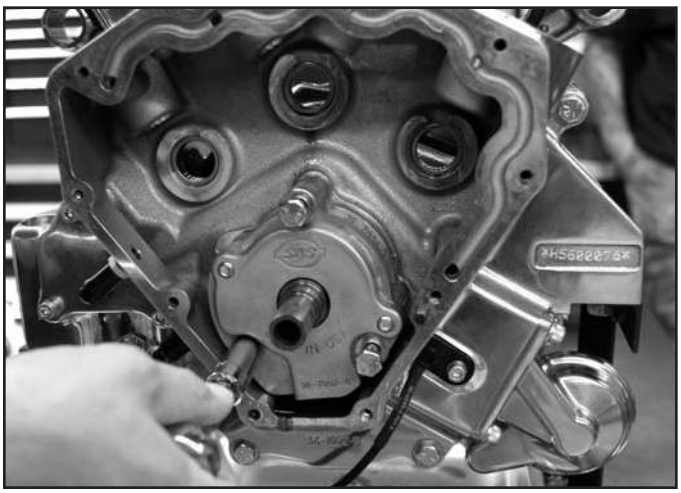

NOTE: *Unless there is an oil system issue, there should be no reason to disassemble the oil pump assembly.*

3- Carefully slide the oil pump assembly off of the pinion shaft.

4- Inspect the back side of the pump, the case mating surfaces and passages for debris. If any debris is present in these areas, a complete inspection of the oil tank and oil lines will be needed. Disassembly of the engine may also be needed if debris is found also.

DISASSEMBLY

1- Place the pump on a clean rag on a flat surface. Remove the two 5⁄16" bolts on the back side of the oil pump.

Fig. 4-2

NOTE: *The oil pump has nothing holding it together at this time. Be sure to use care when separating the sections as they are free to fall away from each other.*

2- Carefully separate the components. Take time to note the orientation and order of components in the oil pump assembly as you disassemble them. Also, be aware that there are two washers and a wave washer that will want to fall out as you separate the assembly.

Fig. 4-3

SERVICE

1- Inspect the gerotor gears for chips, grooves and scratches caused by foreign material passing through.

2- Use a feeler gauge to measure the clearance of the gerotor gears. If the number exceeds .004" replace both gears.

Fig. 4-4

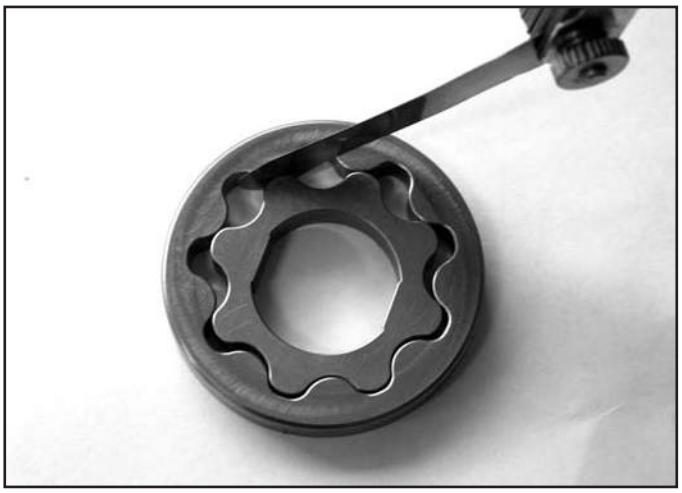

ASSEMBLY

The assembly of the S&S® X-Wedge™ oil pump requires the components to be put back in the exact same place they came from. Be sure to utilize the line drawing in the Illustrations & Warranty section to assure you assemble the unit correctly.

TIP: The oil pump body is comprised of three main parts:

- *Supply Body-back third*
- *Scavenge Body-center section*
- *Cover Body-front third*

Pressure Relief Valve/Supply Body

1- Verify that the oil pump supply body (closest to engine case) is clean and free of debris.
2- Apply assembly lube to the pressure relief valve plunger.
3- Install pressure relief plunger and spring into the oil pump supply body.
4- Verify that the plunger moves freely in its bore.

Supply Gerotor Gears

1- Install the supply gerotor gears in the oil pump supply body with a generous coating of assembly lube.
2- Inspect the oil pumps gerotor supply gears for unrestricted movement.

Divider Plate Assembly

1- The divider plate assembly is actually three pieces—two outer plates that clamshell a wave washer.
2- Install the assembly over the oil pump supply body gerotor gears.

Scavenge Body

1- Install the oil pump scavenge body onto the oil pump supply body by mating the hollow locating dowels with the corresponding openings.

Scavenge Gerotor Gears

1- Verify that the oil pump scavenge body is clean and free of debris.
2- Apply assembly lube to the scavenge gerotor gears and install them on the oil pump scavenge body.

Fig. 4-5

3- Inspect the oil pumps gerotor scavenge gears for unrestricted movement.

Oil Pump Body Cover

1- Install the oil pump cover body onto the oil pump supply body by mating the hollow locating dowels with the corresponding openings.

Oil Pump Steel Backing Plate

1- The steel oil pump body backing plate mounts against the oil pump supply body.
2- Install two 5/16-18 x 2.25" oil pump bolts with flat washers through all of the oil pump body components. Tighten these bolts to 100 in-lbs.

INSTALLATION

The oil pump assembly installs with the steel backing plate against the engine case.

Fig. 4-6 & 4-7

TIP: Before torquing the backing plate bolts, it is possible to use the pinion shaft and case to help align the pump. Install the two 5/16" bolts from the back side of the pump finger tight. Slide the pump onto the crankshaft and over the dowel pins. This will help the pump rotors and bodies align. Carefully remove the pump and final torque the pump bolts.

1- Align the centers and flats of the supply and scavenge gerotor gears inside the oil pump body. Apply a light coat of assembly lube to the centers and flats.
2- Slide the oil pump body over the pinion shaft and against the engine case. Hollow locating dowels will ensure the pump body is in the correct position. If the oil pump body doesn't easily slide over the pinion shaft, verify the alignment of the gerotor flats and centers and attempt installation again.
3- Treat the three 5⁄16-18 x 3" oil pump to case bolts with blue Loctite® 242.
4- Install the three bolts and torque to 15-ft-lbs.

Fig. 4-8

Fig. 4-9

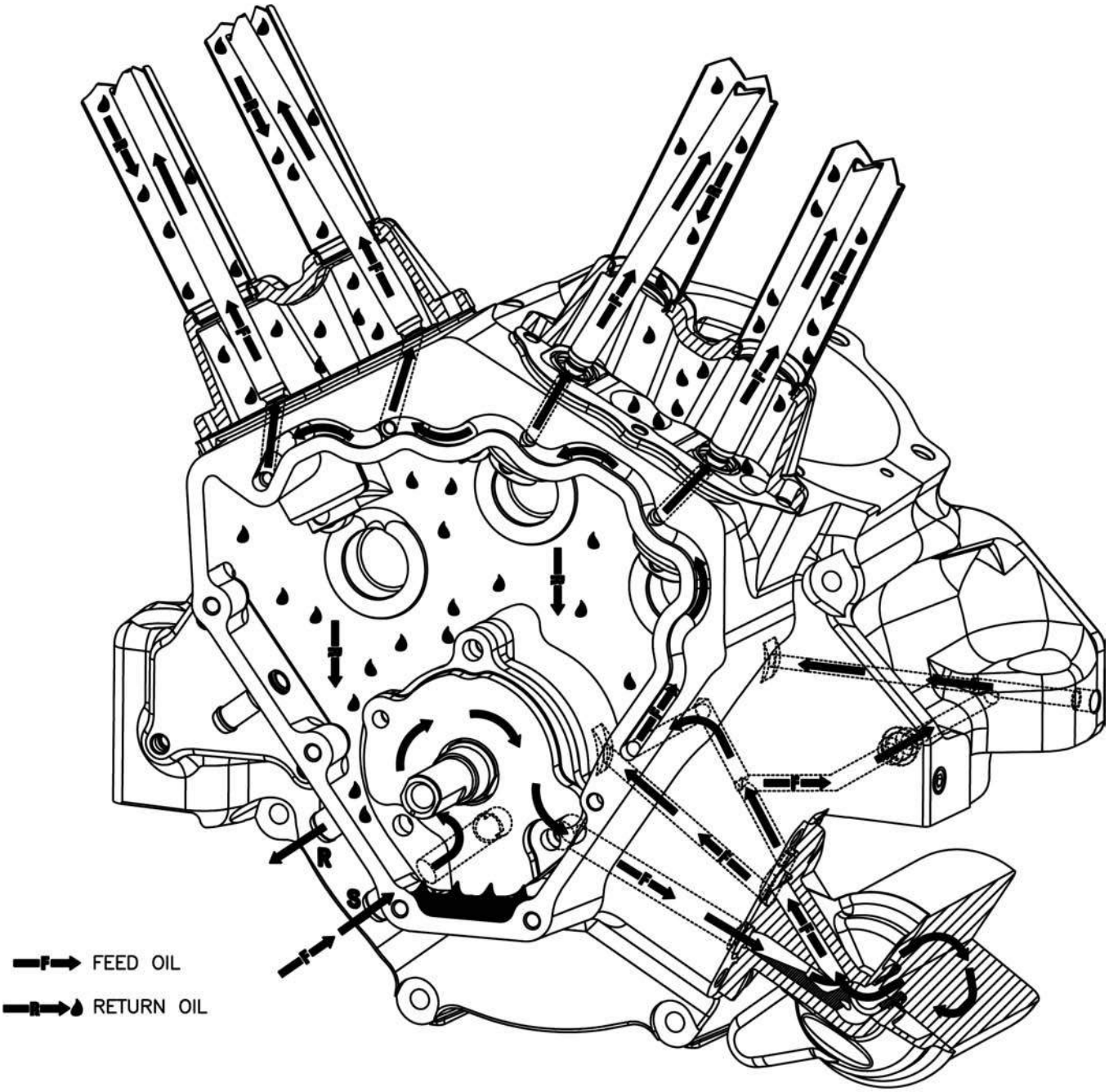

Fig. 4-10

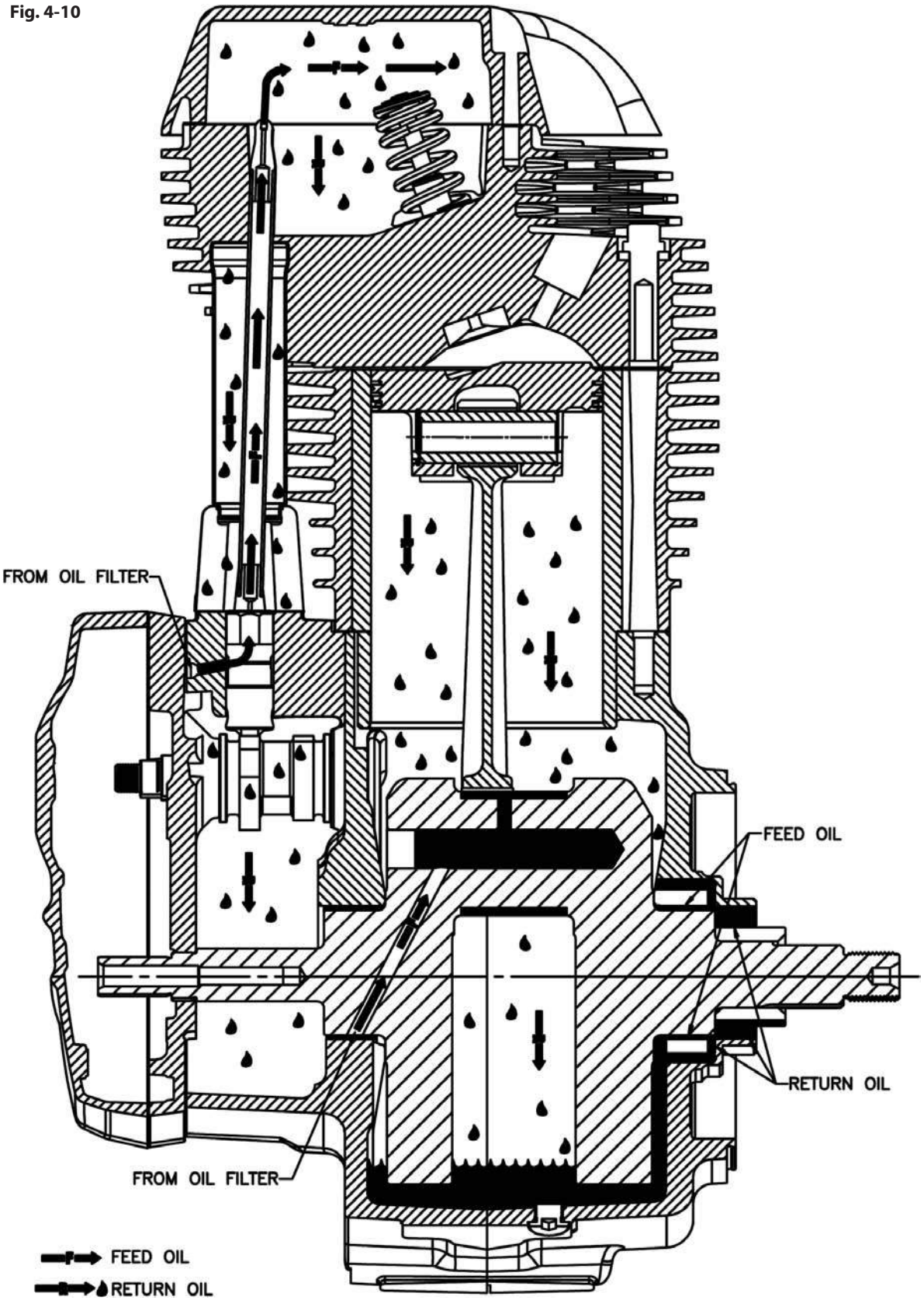
FROM OIL FILTER
FEED OIL
RETURN OIL
FROM OIL FILTER
FEED OIL
RETURN OIL

OILING SYSTEM

Oil flows from the tank (G), through the supply line, and into the gerotor style oil pump (F). After running through the gerotor, the oil flows by a pressure relief valve that is machined in the oil pump body. If the oil pressure becomes excessive, this valve opens to allow excess oil to flow back to the supply side of the pump. Oil is then routed to the oil filter (C). After the oil filter, oil is directed to the oil pressure sending unit for monitoring oil pressure (K). Oil then flows to the tappet bores and to the lower end.

NOTES:

- *Orientation of fitting (B) must be as shown.*
- *The diameter of the metered orifice at (B) is .100".*
- *Vent and return tubes positioned higher than oil level.*
- *Minimum 4 quart total oil tank capacity 1 quart air space required.*
- *Fitting size (min. diameter).*

Oil flows through the tappet bores and fills the tappet body. The tappet pumps up and oil is directed to the top of the tappet. At this point, the tappet meters the flow of oil to the top end. After metering, oil travels up the center of the pushrod, through the rocker arm, and is splashed onto the valve train components in the head.

High pressure oil that flows to the lower end is fed through a crankshaft passage to the cam side main plain bearing. An oil passage drilled in the crankshaft directs oil from the main to both the connecting rod bearings. Another passage in the case directs pressurized oil to the drive side main bearing. Splash oil from the crankshaft lubricates the wristpins, piston rings and cylinder walls.

Oil Return and Crankcase Breather System

Oil that has accumulated in the crankcase is directed to the scraper cavity by the rotation of the flywheels. A reed valve (J) opens when the pistons are traveling downward, expelling excess oil, air and small quantities of blowby gases. This mixture then enters the cam chest, where the oil settles to the bottom.

Pressurized oil that travels to the top end drains back through the pushrod tube covers and also drains into the cam chest.

As the oil collects in the bottom of the cam chest, the oil pump scavenge gerotor then pumps the oil back to the tank (H). Any pressure variation between the tank and cam chest is equalized by the vent tube (I).

The crankcase vapors in the cam chest escape through the engine breather vent fitting (A), which contains a metered orifice at the throttle body (B). The blowby vapors are then directed into the throttle body and consumed in the engine.

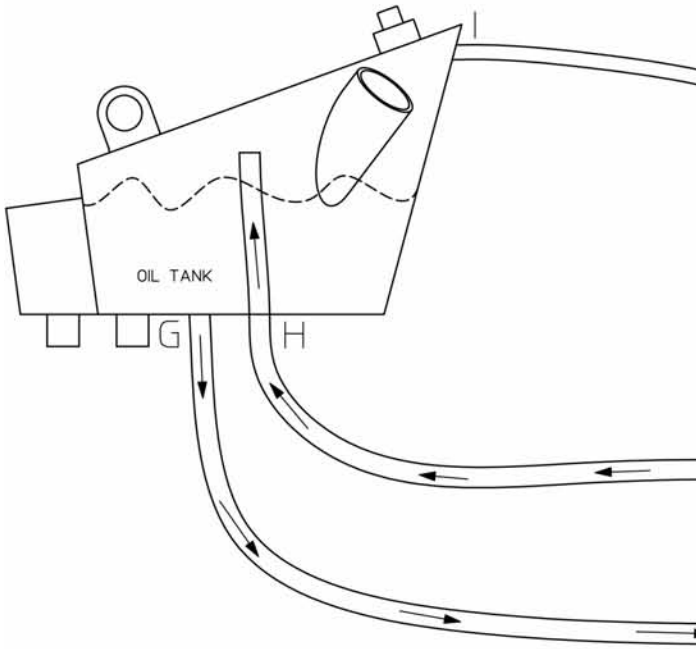

Breather System

The X-Wedge™ uses a case breathing system that connects to the throttle body. Crankcase emissions are routed through the valve at the top of the case and into the base of the throttle body. Through the normal combustion process the crankcase will force emissions into the cam chest. These vapors will be routed to the throttle body and back into the combustion chamber to be burnt before exiting through the exhaust system.

This cleaner method will eliminate the oil carry-over often created by breathers placed in the head that vent into the air cleaner.

Fig. 4-11

BREATHER SYSTEM DIAGRAM

A. Crankcase breather vent (orientation critical)
B. Throttle body fitting with .100" metered orifice
C. Oil filter
D. Engine to oil tank vent
E. Return to oil tank
F. Supply from oil tank
G. Supply to engine
H. Return from engine
I. Oil tank to engine vent
J. Reed valve
K. Oil pressure sending unit

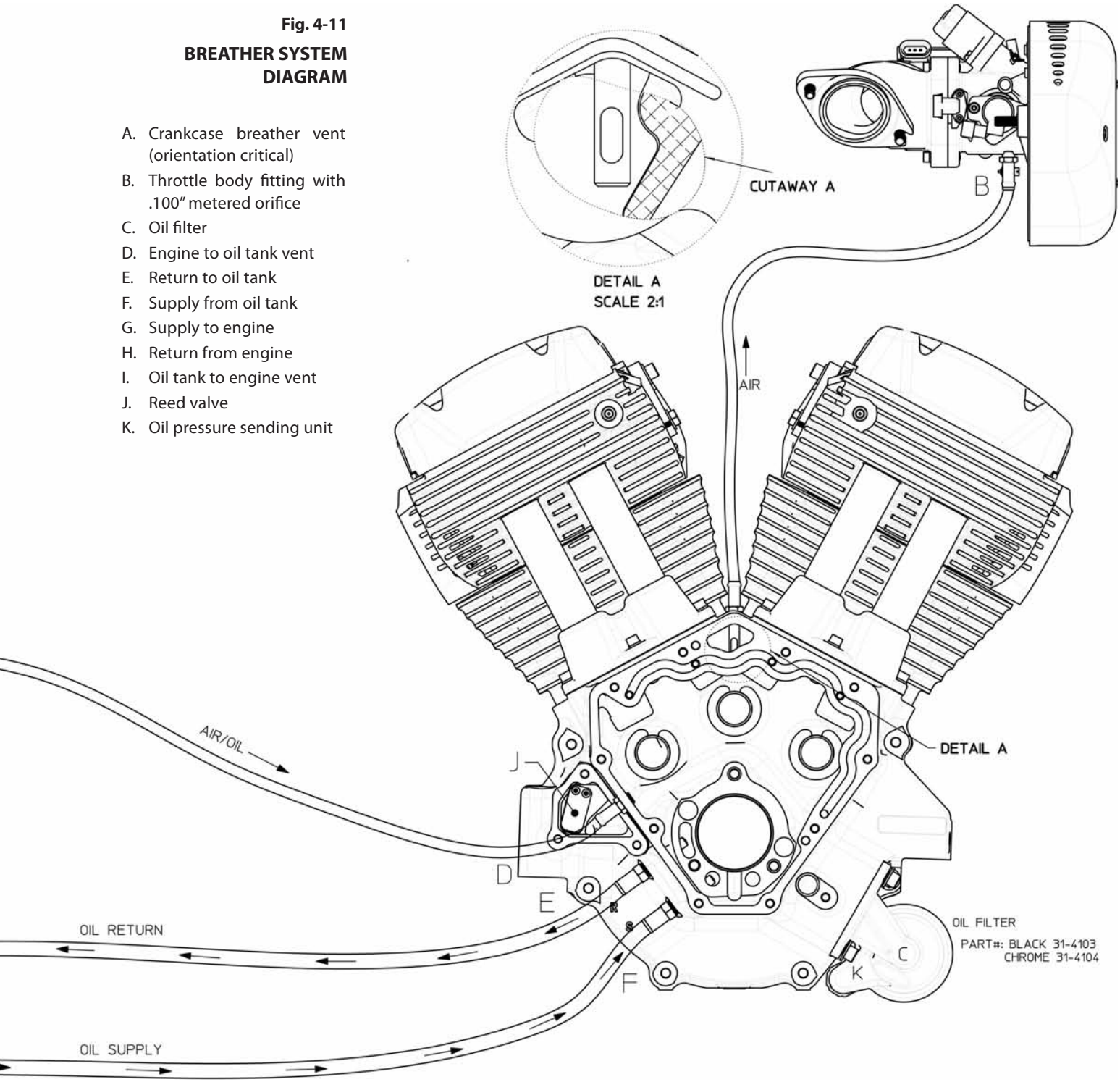

Because every industry has a leader

Fuel Injection

INTRODUCTION

The S&S® Closed Loop VFI Fuel Injection System for your X-Wedge™ engine requires the use of an S&S 106-0478 wiring harness (or 2002-2003 stock wiring harness or equivalent). Additionally installation requires the use of the S&S module that was included with your purchase.

REMOVAL

NOTE: *If using H-D® or similar wiring harness the coil plug will need to be changed to work with the included S&S® coil. The S&S coil requires the use of a three prong plug, similar to the 1999-'01 coil plug.*

1- Remove the fuel pump fuse or disconnect its power wire.
2- Turn the key on and crank the engine for five seconds. Repeat this process two more times to assure all fuel pressure has been released.
3- Disconnect the negative battery terminal.
4- Remove the fuel line from the fuel tank. Take care not to damage the fuel line when removing the hose clamps. When reinstalling the fuel line DO NOT use worm drive-style hose clamps. They can dig in and damage the fuel line. Replacement clamps (PN 106-2251) are available from S&S.
5- Remove the gas tank (if required to access fuel injectors and manifold mounting screws).
6- Remove the air cleaner cover (Teardrop) or the runner assembly (Single-Bore Tuned Runner) and the backing plate or mounting bracket.

Fig. 5-1

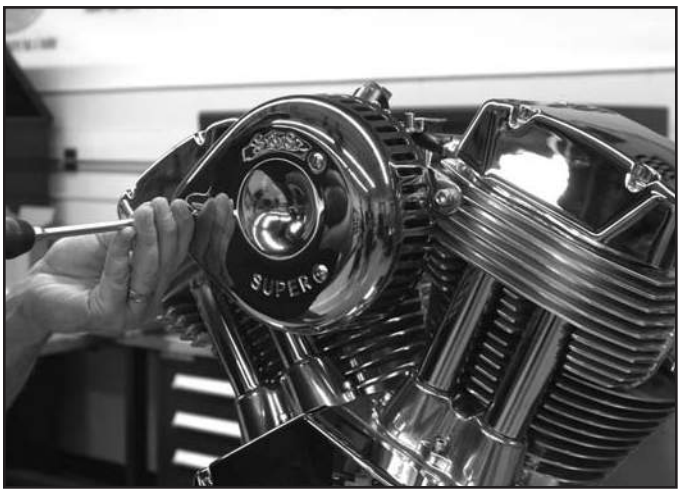

⚠ DANGER

Gasoline in EFI systems is under pressure. Failure to follow fuel rail preparation and assembly instructions may result in personal injury and/or property damage.

⚠ WARNING

The following installation should only be done by a qualified technician with the proper tools and training. If you are not comfortable or unsure of your abilities, contact a local S&S dealer to handle the installation.

7- Disconnect the wiring harness leads from the fuel injectors, throttle position sensor, manifold pressure sensor, idle air control motor, and intake air temperature sensor.
8- Loosen and remove the ¼-20 x ⅞" screws in the injector mounting blocks. The injectors can be pulled out of the heads after lifting the mounting blocks out.

Fig. 5-2 TIP: Use compressed air to blow any built up dirt away from the fuel injectors before removing them to help prevent any debris accidentally falling into the injector mounting positions.

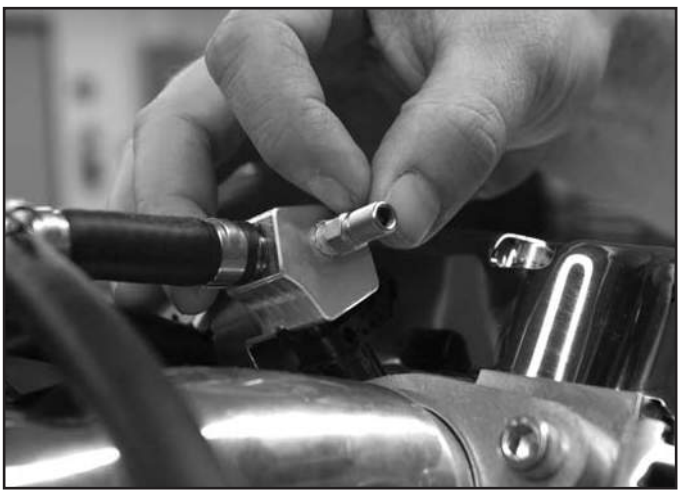

9- Remove the throttle body and manifold as one unit. Loosen the manifold mounting bolts, slide the assembly out, and place it on a clean work area.

Fig. 5-3

SERVICE

Intake Air Temperature Sensor (IAT)

1- Remove the two Torx T10 mounting screws that hold the sensor on the throttle body.
2- Replace the gasket with a new one.

Fig. 5-4

3- Use Loctite® 222 on the T10 Torx button head M3 x .5 x 10mm screws and tighten to 6-8 in-lbs.

Idle Air Control Motor (IAC)

1- After removing the IAC from the old induction system, replace the O-ring. Lubricate the O-ring with clean engine oil before installing it.

2- When mounting the IAC motor on the VFI throttle body, position the electrical connector so that it points inward towards the engine and manifold.

3- Apply a light coat of Loctite® 222 on the threads of the hex-head screws and tighten them to 20-24 in-lbs.

Fig. 5-5

Throttle Body and Throttle Position Sensor (TPS)

1- The throttle body and TPS are calibrated components. The only serviceable parts are the gaskets and O-rings mentioned elsewhere in this section.

2- If the throttle position sensor fails or is tampered with, the throttle body assembly will need to be recalibrated at S&S® Cycle. Contact the S&S Tech Department to make arrangements to send it in for servicing. Do not attempt to service this assembly.

Manifold Absolute Pressure (MAP) Sensor

1- To remove the MAP sensor, remove the two screws from the throttle cable bracket. Once the bracket is removed, the MAP sensor can be pulled out of the manifold.

Fig. 5-6

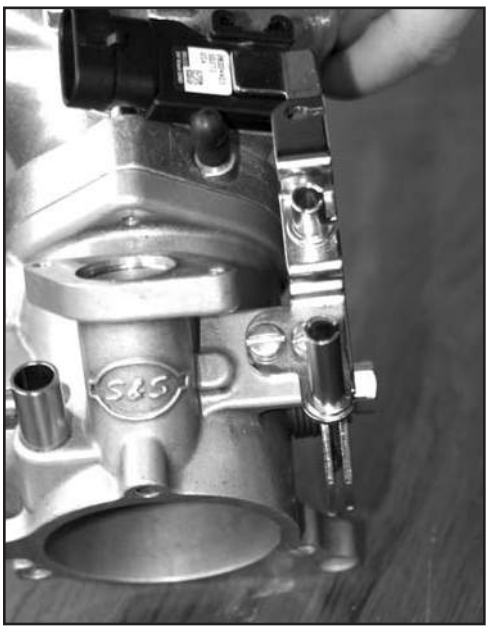

2- To reinstall the MAP sensor, lightly lubricate the orange seal and insert the sensor. Position the cable guide in place, apply Loctite® 222 to the 10-24 x ¼" screws for the cable guide and tighten the screws to 18-22 in-lbs.

INSTALLATION

⚠ WARNING

Gasoline is very flammable. Work in a well ventilated area. Keep all open flame away from the work area.

Single-Bore Throttle Body and Manifold (Induction)

It is best to assemble these two components together on a bench before starting the installation on the engine.

1- Install the new O-ring into the throttle body. A light film of clean engine oil can be used to help hold the O-ring in place. Align the manifold to the throttle body, use purple 222 Loctite on the 10-24 x 1" socket-head assembly screws (with flat washers) and tighten them to 35-40 in-lbs.

Fig. 5-7

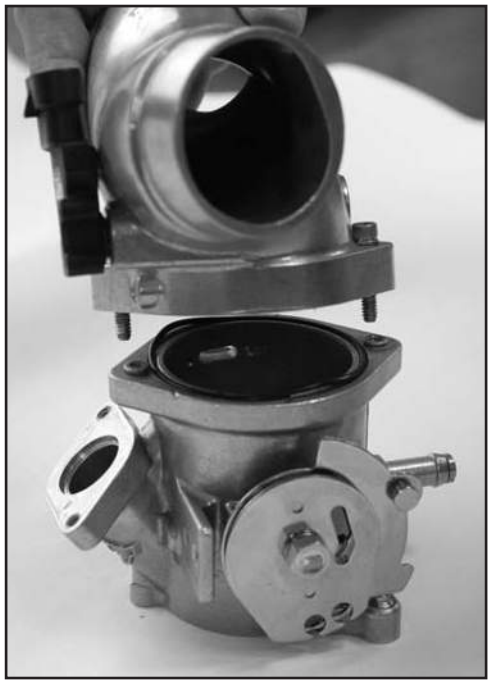

2- To reinstall the MAP sensor, lightly lubricate the orange seal and insert the sensor. Position the cable guide in place, apply Loctite 222 to the 10-24 x ¼" screws for the cable guide, and tighten the screws to 18-22 in-lbs.

3- Install a new gasket when installing the Intake Air Temperature (IAT) sensor. Use Loctite 222 on the T10 Torx button head M3 x .5 x 10mm screws and tighten to 6-8 in-lbs.

4- Install the new O-ring on the IAC motor. Lubricate the OD of the O-ring with a light film of clean engine oil. Coat the threads of two 5⁄16" hex-head 10-24 x ½" screws with Loctite 222. Install the IAC motor with the connector pointing down and tighten the screws to 24-30 in-lbs.

5- Install the manifold flanges and gaskets on the manifold. Orient the tapered end of the gasket towards the manifold and the flat end to the heads.

6- Hold the manifold up in its mounting position and connect the manifold using the 5⁄16 x 1" mounting flange bolts (socket head on the primary side, hex-head on the cam side) coated with Loctite® 242. Lightly snug all four manifold mounting bolts BUT DO NOT TIGHTEN AT THIS TIME. Connect the throttle cables, cruise control bracket (if applicable), and all of the wiring harness connectors at this time.

7- Connect the breather hose from the top of the crankcase to the bottom of the throttle body.

Fig. 5-8 & 5-9

8- With a new gasket on the backing plate, mount it to the engine BUT DO NOT INSTALL THE SCREWS YET. Align the bore and holes. Remove the backing plate, tighten the manifold mounting bolts to 14-18 ft-lbs. Now use blue threadlock on the three fillister head screws, tighten them in the backing plate to 35-45 in-lbs. Install the two 242 Loctite® coated special 5⁄16-18 x 1¼" screws through the backing plate and torque to 10-12 ft-lbs.

Fig. 5-10

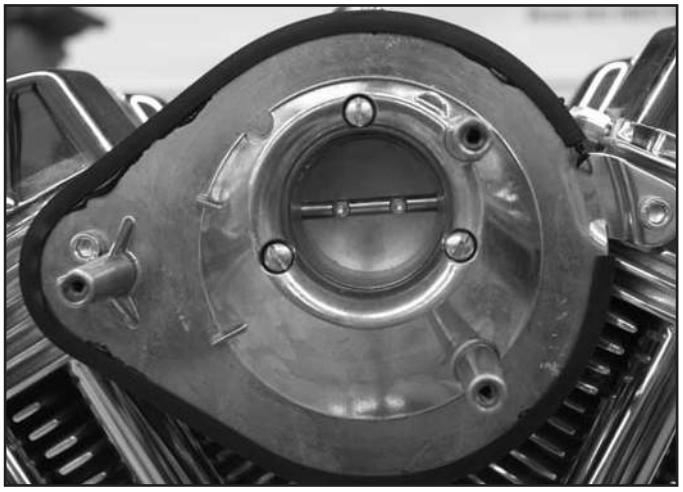

9- Apply 242 Loctite to the air cleaner mounting screws and install the air cleaner, air cleaner cover and tighten the screws to 35-45 in-lbs.

INSTALLATION

Fuel System

1- Lubricate the injector O-rings with clean engine oil. Install the fuel injectors in the injector mounting blocks. Orient the injectors so the connector is facing up when installed in the mounting blocks.

Fig. 5-11

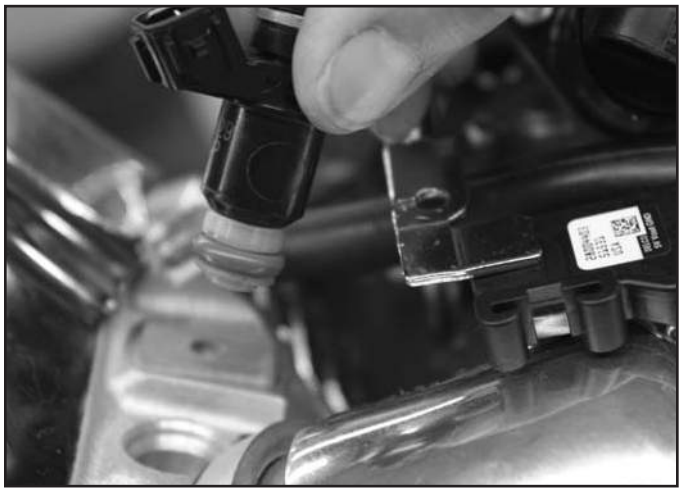

⚠ CAUTION

The O-rings in the fuel injectors seal pressurized fuel. If they show any damage or abrasion, replace them immediately.

⚠ CAUTION

When reusing the fuel lines, inspect for cracks, cuts and abrasions. Replace the line if any are evident.

2- Loosely install the hose clamps on the 2¼" long, 5⁄16" OD fuel hoses. The clamps are single use only and require a special crimping tool. If preferred, S&S also provides a reusable clamp (PN 106-2251) that does not require a special tool. DO NOT use a worm gear clamp as it may cut the fuel line.

3- Position the hoses on the T connection loosely. When installing the longer hose on the T, be sure a hose clamp is in place.

4- Prior to installing injectors in heads, be sure that the injector mounting block insulating pads are in place on the head.

Fig. 5-12

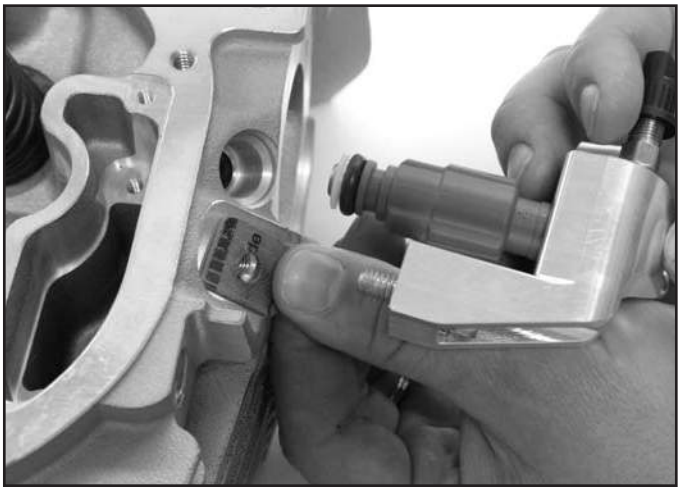

5- Apply a small amount of engine oil to the O-rings in the injectors. Position the fuel injectors in the heads and press them into place. Depending on the motorcycle, it may be easier to crimp the clamps before the injectors are installed in the heads.

6- Install the ¼-20 X ⅞" screws after applying Loctite 242 blue to their threads. Torque the screws to 7-9 ft-lbs. Crimp the hose clamps—or if using reusable clamps, torque to 12-18 in-lbs.

Reconnect the fuel pump and battery. Then pressurize the fuel system by turning the key on (and, if applicable, turning the engine shut off switch to run). Check for leaks.

CLOSED LOOP

If the pipes you are using for your X-Wedge™ engine are not already equipped with 02 sensor mounting bungs, the installation of the included S&S mounting bungs requires welding. If you are not comfortable welding these bungs in, please contact the S&S® Tech Department for a recommendation of a shop to do it for you.

O2 Sensor Installation

1- Be sure the battery is disconnected before starting the installation.

2- You will need to install an oxygen sensor in each headpipe. The ¾" holes to mount the sensors will need to be positioned 4" to 12" from the exhaust flange. To determine the best position for the oxygen sensors, the headers should be installed on the bike.

3- To make locating the sensor a bit easier, S&S technicians have created a mock-up sensor. As you can see in Fig. 5-13, the tip of an oxygen sensor was cut off so the weld-in boss could be threaded on it and allow the unit to sit flush on a header. Now the assembly can be put on a pipe to verify that it will not come in contact with any moving parts.

Fig. 5-13

4- Once you are certain of the mounting position, trace the outside shape of the mounting boss with a marker or scribe.

Fig. 5-14

5- Use a drill or die grinder with a carbide burr to achieve a ¾" hole in each of the header pipes.

6- Weld the boss in place using stainless-steel filler rod. When it cools, run an M18 x 1.5 tap through it to verify that none of the threads were damaged or distorted.

Fig. 5-15

7- Install the oxygen sensor in each pipe and torque it to 30-44 ft-lbs. Note that new oxygen sensors come with a high-temperature lube on the threads. Be sure to use a high-temperature lubricant that is safe for oxygen sensor use on the threads of oxygen sensors being re-used. Install the header pipes on the motorcycle.

WIRING S&S® O2 SENSORS

If you are using the S&S Wiring Harness PN 106-0478 the O2 sensor wires connect directly into the harness and no additional connections beyond the four wires are required. If you are using another wiring harness like the 2002-'03 Delphi® harness, follow the instructions later in this chapter.

Fig. 5-16

S&S Wiring Harness

The difference between the front and rear oxygen sensor wire harness leads on the S&S wiring harness is length and Number 3 pin color. The front is the longer lead with a White/Orange pin on Number 3. The rear is the shorter lead and pin Number 3 is White/Blue.

TIP: Route the O2 wiring and Deutsch® connectors so they cannot contact any moving or hot parts. When you connect the Deutsch connector for each oxygen sensor to the harness plugs, listen for an audible click to confirm the connection. Wire tie the harness to the frame to ensure no contact will occur when the bike is being ridden but still allow enough slack for engine movement.

1- Connect the four leads from the front sensor as follows
   a. White (W) to the Yellow/Green (Y/GN)
   b. White (W) to the Black (BK)
   c. Black (BK) to the White/Orange (W/O)
   d. Gray (GY) to the Black/White (BK/W)
2- Connect the four leads from the rear sensor as follows
   a. White (W) to the Yellow/Green (Y/GN)
   b. White (W) to the Black (BK)
   c. Black (BK) to the White/blue (W/BE)
   d. Gray (GY) to the Black/White (BK/W)

Fig. 5-17
Oxygen sensor connections with S&S® harness

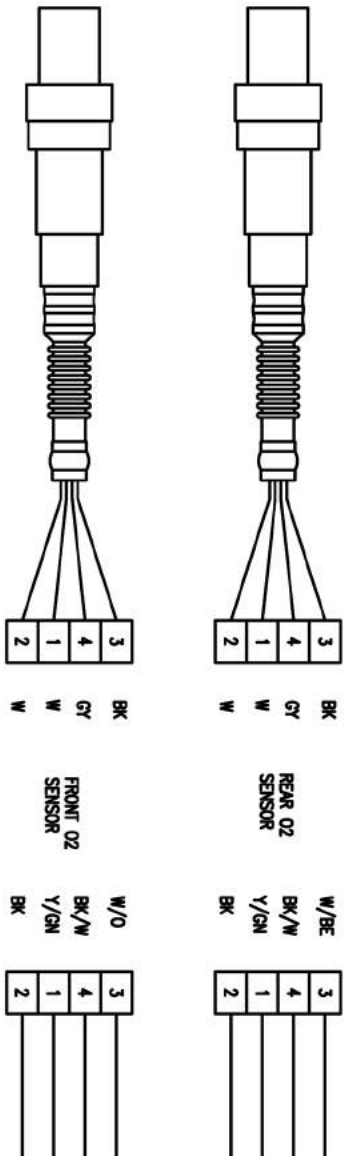

Fig. 5-18
Connector Diagram

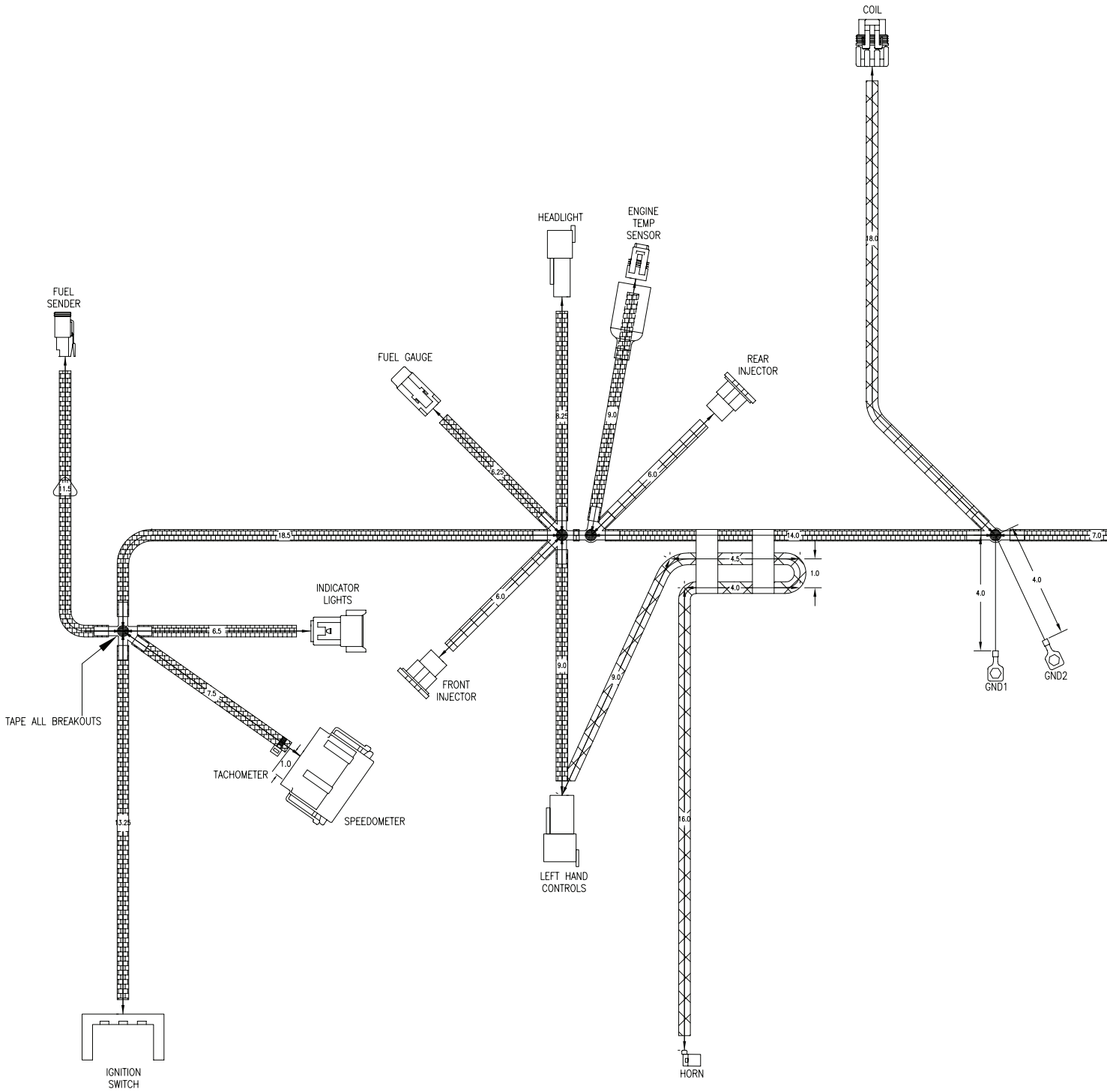

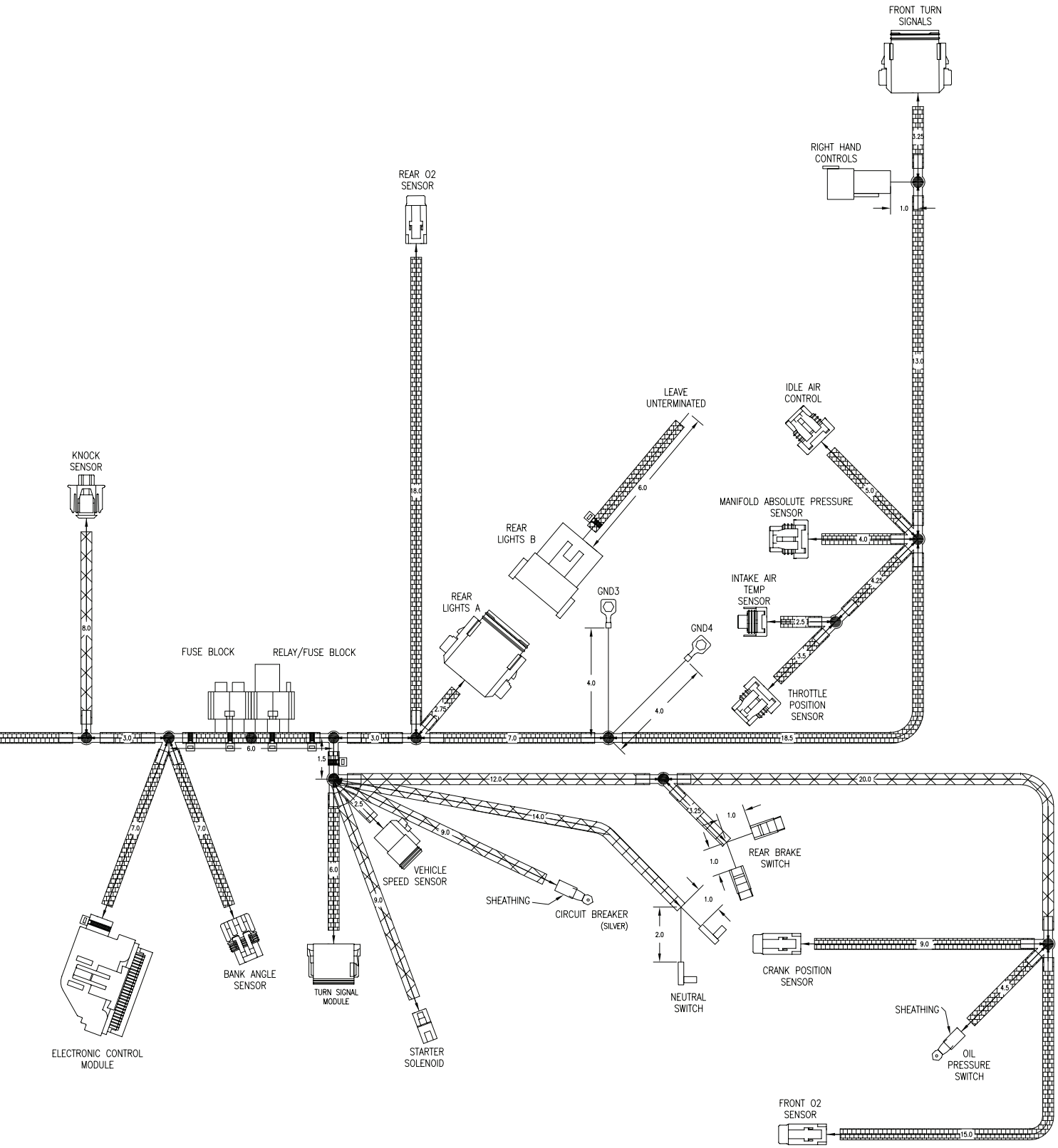
FRONT TURN SIGNALS
RIGHT HAND CONTROLS
REAR O2 SENSOR
LEAVE UNTERMINATED
IDLE AIR CONTROL
KNOCK SENSOR
MANIFOLD ABSOLUTE PRESSURE SENSOR
REAR LIGHTS B
INTAKE AIR TEMP SENSOR
GND3
REAR LIGHTS A
GND4
FUSE BLOCK
RELAY/FUSE BLOCK
THROTTLE POSITION SENSOR
REAR BRAKE SWITCH
VEHICLE SPEED SENSOR
SHEATHING
CIRCUIT BREAKER (SILVER)
CRANK POSITION SENSOR
BANK ANGLE SENSOR
TURN SIGNAL MODULE
NEUTRAL SWITCH
SHEATHING
ELECTRONIC CONTROL MODULE
STARTER SOLENOID
OIL PRESSURE SWITCH
FRONT O2 SENSOR

Fig. 5-19
Wiring Diagram

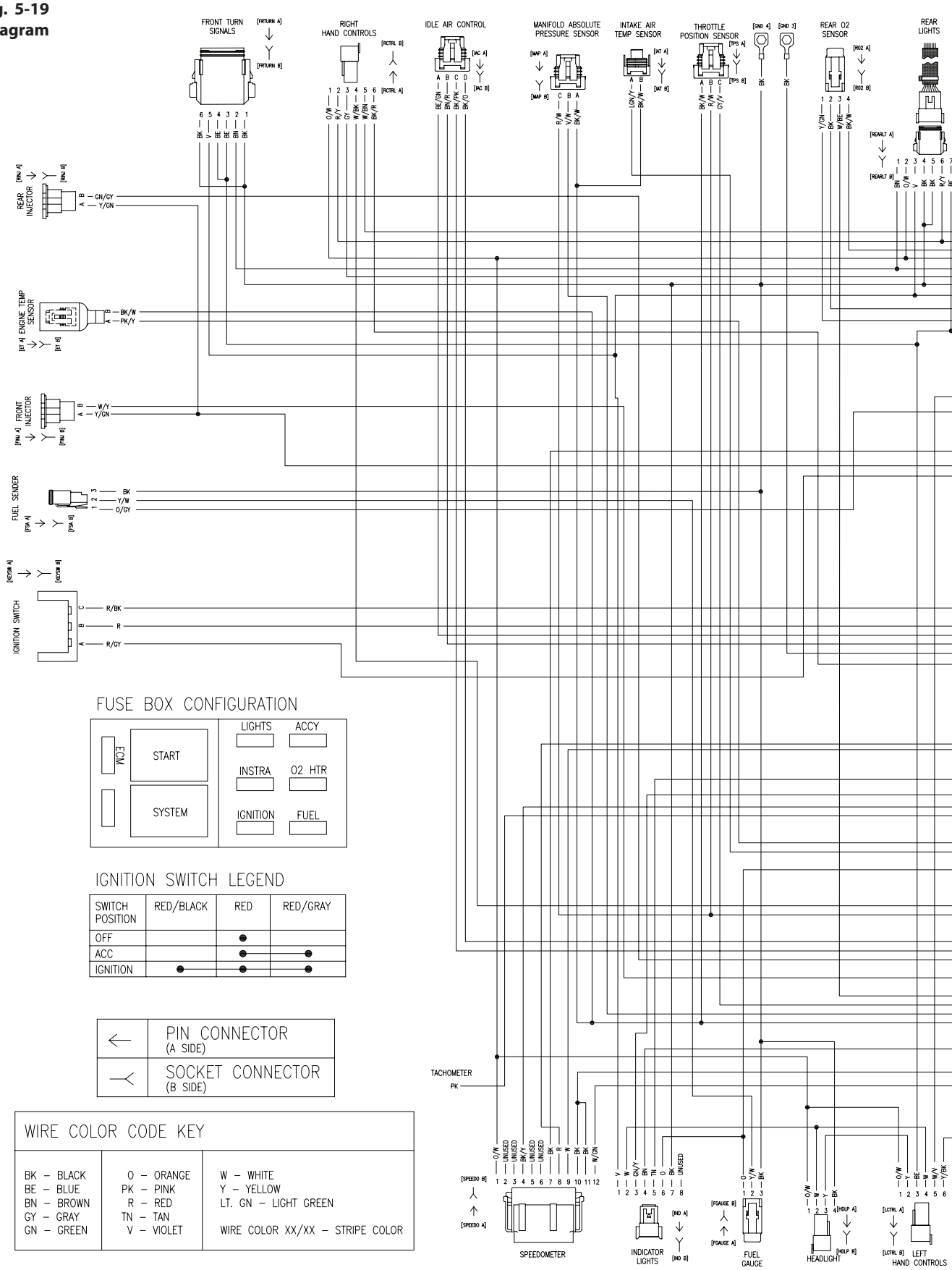

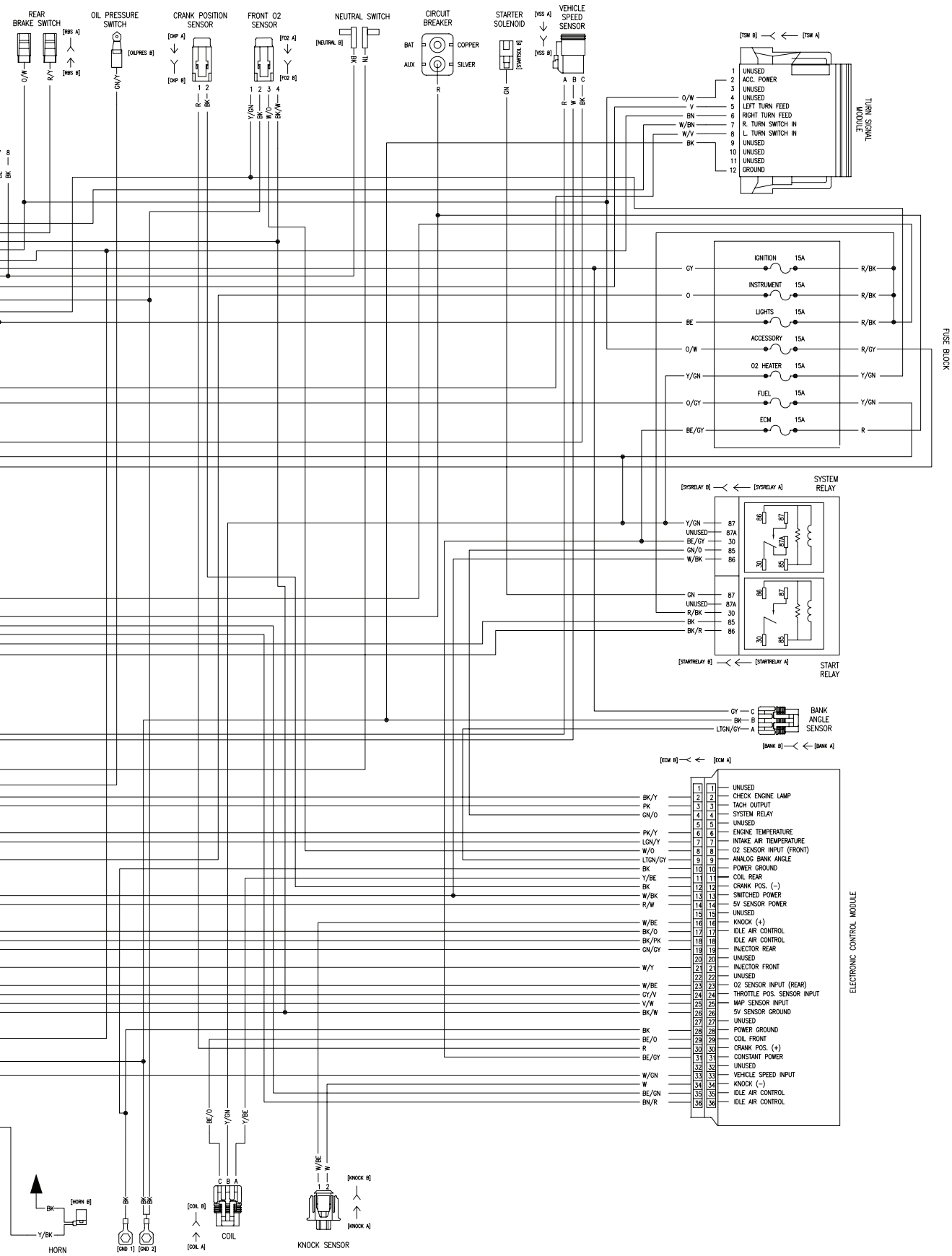
REAR BRAKE SWITCH
OIL PRESSURE SWITCH
CRANK POSITION SENSOR
FRONT O2 SENSOR
NEUTRAL SWITCH
CIRCUIT BREAKER
STARTER SOLENOID
VEHICLE SPEED SENSOR
TURN SIGNAL MODULE
FUSE BLOCK
SYSTEM RELAY
START RELAY
BANK ANGLE SENSOR
ELECTRONIC CONTROL MODULE
HORN
COIL
KNOCK SENSOR

Non-S&S® Harness

1- Route the O2 wiring and Deutsch® connectors so they cannot contact any moving or hot parts. When you connect the Deutsch connector for each oxygen sensor to the harness plugs, listen for an audible click to confirm the connection. Wire tie the harness to the frame to ensure no contact will occur when the bike is being ridden but still allow enough slack for engine movement.

2- Continue running the O2 sensor leads so the four wire ends are directly next to the 36-position connector and fuse block area. Cut the wire tie at the base of the main wiring harness where it meets with the 36-position gray connector.

Fig. 5-20

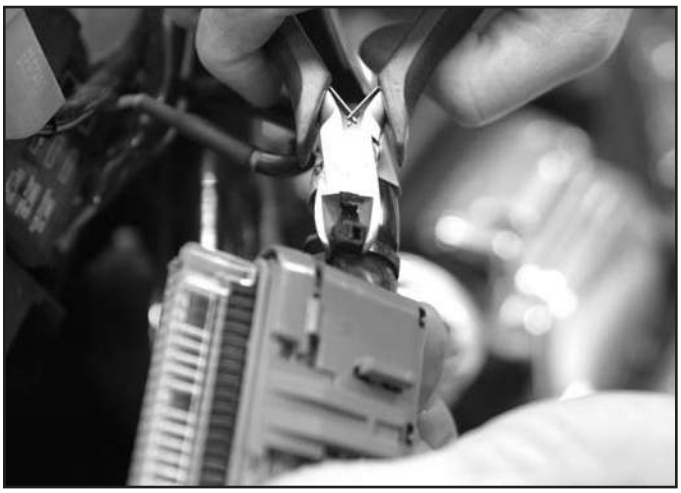

3- Carefully open the backside of the 36-position connector housing.

Fig. 5-21

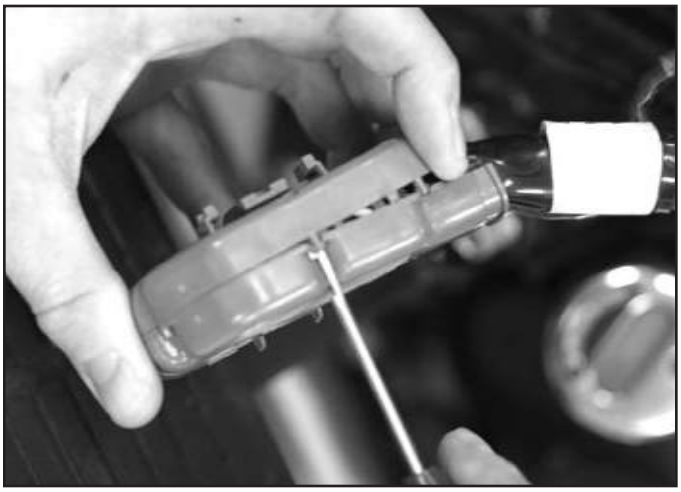

4- Gently release the clips on each side of the clear plastic cover on the 36-position connector by pressing on each clip with a small flat screwdriver.

Fig. 5-22

5- Remove the socket plugs in terminal positions #8 and #23.

Fig. 5-23

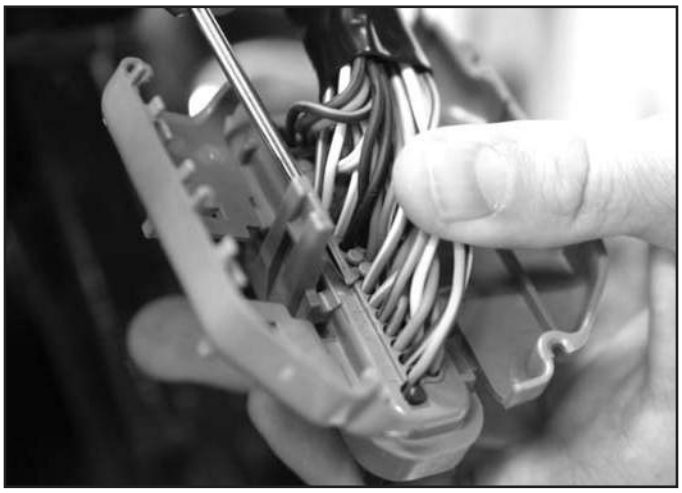

6- Using a Sealed Electrical Tap from the supplied hardware kit, open the blue plastic cover and position it over the wire coming out of position #26 (black with a white stripe). Then slide the black wire with a white stripe from the S&S® harness into the secondary connection position.

Fig. 5-24

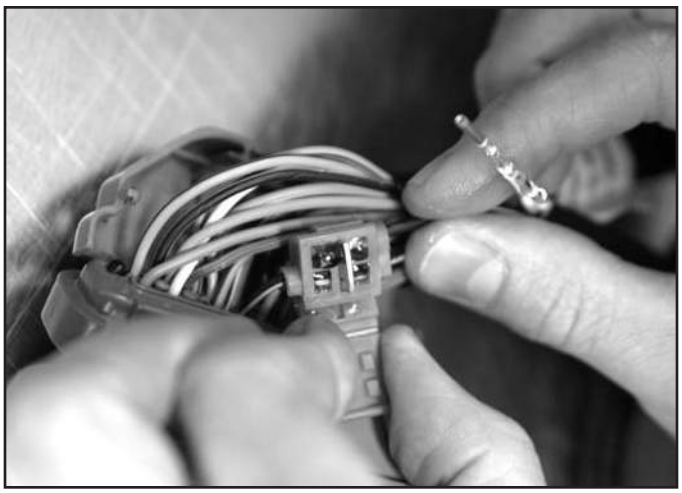

7- Use a pair of pliers to firmly press the metal connector into place over both wires. You can put a small amount of pressure on the connector as you position the wires to make sure they are in the correct position. Once the connector is pressed in, close the blue plastic cover and listen for a click to confirm it is seated.

Fig. 5-25

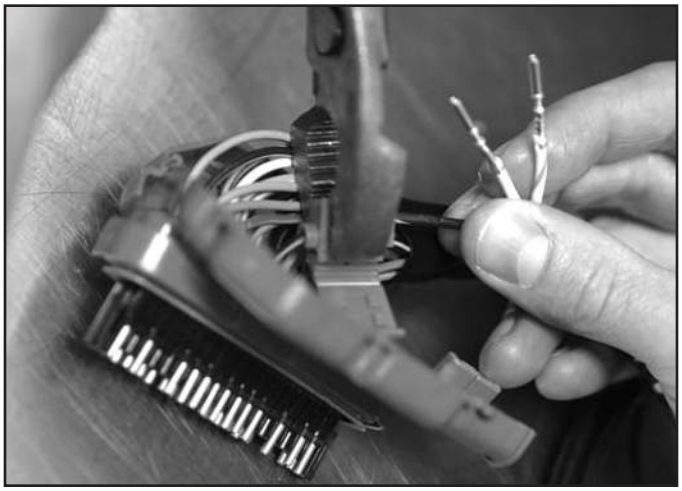

8- Insert the white wire with an orange stripe into position #8. Next insert the white wire with the blue stripe into position #23.

9- Confirm the terminals are all in proper alignment and reinstall the clear plastic cover. Now you can tuck the Sealed Electrical Tap into the 36-position connector cover and close it, making sure to get all the clips back in place. Finally, reinstall a wire tie at the base of the 36-position connector.

Fig. 5-26

10- Confirm that there are two 15-amp fuses in the blue tap-a-fuse on the red wire. Then insert it into the fuel pump fuse slot as shown in Fig. 5-27. Take care not to disconnect the fuses as you slide it back into the fuse holder. See Fig. 5-28.

Fig. 5-27 & 5-28

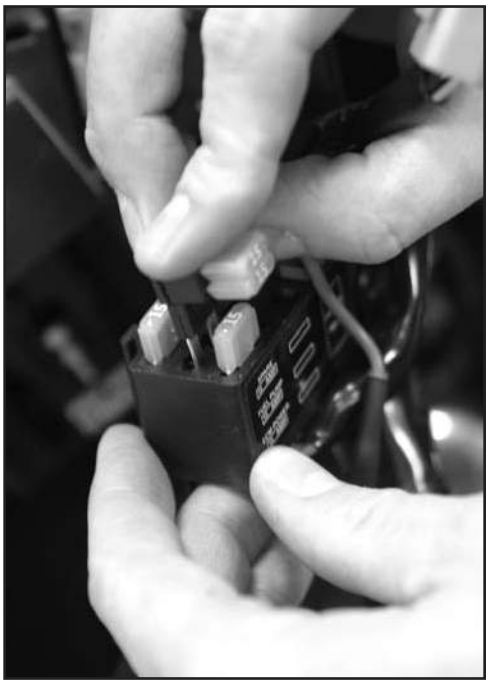

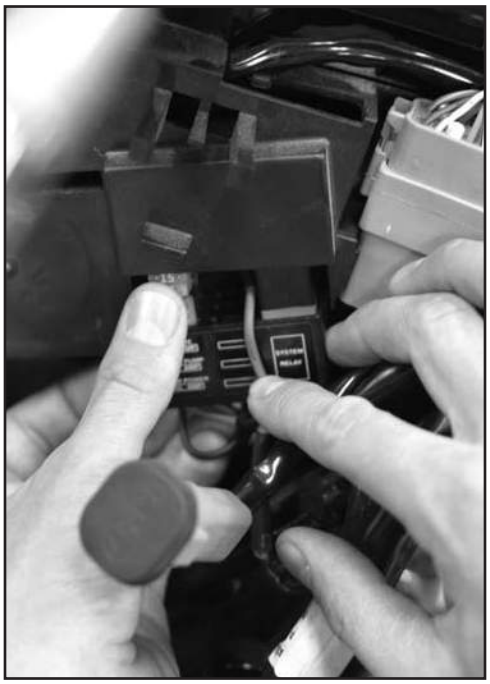

11- Connect the ground wire from the S&S® wiring harness to a ground. We used the ground coming up at the base of the gas tank.

Fig. 5-29

12- Plug the 36-position connector into the VFI module and the installation is complete.

Fig. 5-30

Fig. 5-31
S&S® Closed Loop sensor kit subharness. To be used with non-S&S fuel injection harness.

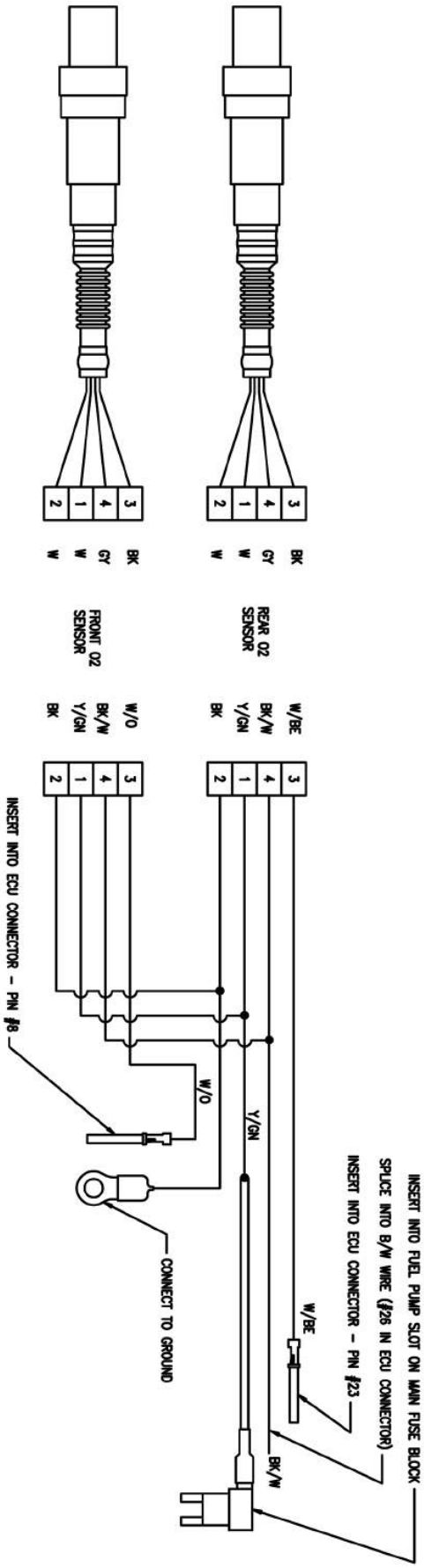

Because every industry has a leader

Troubleshooting

OIL ISSUES

1- If the case is leaking around the seam after being assembled outside of S&S®, verify that cases were assembled using Loctite® 515 to seal them. S&S Cycle recommends the use of Loctite 515 sealant on the crankcase seam. The use of any other type of sealant may cause sweating or leakage.
2- Pinion seal – apply grease on the back side of the pinion seal when assembling the seal. The cavity behind the lip on the seal should be filled.
3- Pushrod tube O-rings – lube the O-rings with clean engine oil before installation to prevent cutting or tearing
4- Carry over in the air cleaner – verify that the oil tank is not overfilled. There should be about one quart of air space above the oil in the tank and the vent line to the engine should be about two inches above oil level.
5- The X-Wedge engine requires the use of an oil filter with a 10 micron rating, and is equipped with an anti-drain back valve. These filters are available from S&S, PN 31-4103 (black) and 31-4104 (chrome).
6- Do not check the oil in a bike that has not been run within 30 minutes of the time you check. Start the engine, let it run for one minute with the bike in an upright position and then shut it off. Wait 30 seconds and then check the oil with the engine upright.
7- Be sure to route the oil tank vent line to have the least possible settling points for oil left in the line.

FUEL INJECTION CONCERNS

1- If your X-Wedge™ engine is an EPA/ARB approved version, the tune file is locked and cannot be modified.
2- Verify that you have uploaded the latest tune file for your specific engine size.
3- All diagnostics must be performed using S&S Pro Tune II software.
4- Verify that the insulating pads are installed between the fuel injector hold downs and the head.
5- Verify that all fuel lines are properly routed with no sharp bends or kinks. The fuel line should be routed so that any air in the line can rise up and return to the tank instead of becoming trapped.

ENGINE PERFORMANCE

1- X-Wedge engines require premium fuel—an octane rating of 91 or higher. Do not use E85 fuel in your engine.
2- The use of pipes without 02 sensors and eliminating the closed loop function of the fuel injection system will drastically affect engine performance in a negative way.
3- If engine will not start and spark is present, verify that the plug wires are routed to the correct cylinder.
4- Use the fitting located on the fuel injector hold down to check fuel pressure. Verify that there is 58psi.
5- If you just replaced your cam drive belt and now the engine will not start, verify that the belt and the cam timing marks are aligned properly. Make certain that the belt was installed with the notch on the pinion gear pointed to the T.D.C. Front cylinder location.
6- Verify that the wiring harness for each fuel injector have not been reversed front cylinder to rear.
7- If you notice a “snakeskin” type of material in the cam belt cavity, do not be concerned. This is a mold release material shedding of the belt.
8- If you notice the bike having an erratic idle when it is very hot, it could be the skip fire system in the ignition. In an effort to reduce head temperature in extreme heat, the skip fire is initiated at idle and will continue until the bike starts moving (and cooling) or the engine temperature starts to drop back to an acceptable level.

ELECTRICAL SYSTEM CONCERNS

1- A fuel injected motorcycle requires a full and constant voltage feed. If you are experiencing hard starting, intermittent running problems or generally poor performance, verify that your charging system is producing a constant 13 or higher voltage reading at all rpm levels. The S&S Pro Tune II software can be used to verify this.

2- S&S recommends a battery with a minimum of 300 cold cranking amps. Using anything less can affect starting and engine performance.

3- When building your motorcycle, be sure that you use full-size battery cables and have a clean area for the ground to connect to the chassis.

ENGINE NOISE

1- When installing the pushrods, be sure that they are seated in the lifter cups. It is easy to miss the cup on the lifters when dropping the pushrods in.

2- Verify that the rocker arm fulcrums are fully seated and properly torqued in the rocker alignment channel.

3- Verify that charging system was installed correctly and there is proper spacing behind the rotor.

Because every industry has a leader

Installation Instructions

INSTALLATION OVERVIEW

This S&S® X-Wedge™ Engine is approved for use in assembled highway motorcycles and conforms to US EPA and the State of California exhaust and evaporative emissions regulations applicable to the model year in which it was produced. A small volume manufacturer, kit manufacturer or assembler using this engine does not have to apply for a separate emission certificate with the EPA or the State of California. A vehicle built according to the given requirements is considered a certified vehicle by the EPA and the State of California.

Included in these instructions are requirements the manufacturer of the motorcycle, kit manufacturer, or assembler is required to follow in order to ensure the engine meets exhaust, evaporative, and permeation emission standards. Prior to starting installation of this engine these requirements should be read and understood.

Failure to meet the requirements outlined in the instructions is a violation of the Clean Air Act and California State law and will make the manufacturer of the motorcycle, kit manufacturer, or assembler subject to penalties and fines.

INSTALLATION REQUIREMENTS

No changes may be made to the engine that could reasonably be expected to increase its exhaust emissions for any pollutant. This includes changes to the fuel metering system; changes to the ignition system; changes to the camshaft; changes to the evaporative system; and modifying, recalibrating, removing, or failing to properly install any other specified component. The following requirements for gear ratio, weight, exhaust, labeling, evaporative system, and permeation must also be met when installing this engine.

Gear Ratio
This engine may only be installed in a highway motorcycle or kit with an N/V ratio less than or equal to 44.7. The N/V ratio is the engine RPM divided by the vehicle speed in miles per hour in high gear. This determines the maximum RPM of the engine for a given vehicle speed in high gear. To find the N/V ratio for your application, divide the engine speed by the vehicle speed while traveling in high gear. The following table gives maximum RPM's for the given speed and N/V ratio.

Fig. 7-1

N/V Ratio	Speed (mph)	Maximum RPM
44.7	55	2458
44.7	60	2682
44.7	65	2905
44.7	70	3129

The N/V ratio can also be calculated based on the number of teeth on primary and secondary sprockets, transmission gear ratio in high gear, and rear tire loaded radius. To calculate the N/V ratio first find the final drive ratio using the following formula:

Primary drive ratio = clutch sprocket teeth/engine sprocket teeth
Secondary ratio = rear sprocket teeth/front sprocket teeth
Transmission ratio = internal gear ratio in top gear
Final drive ratio = (primary ratio) x (secondary ratio) x (transmission ratio)

Next the rear tire circumference must be calculated based on the loaded radius of the tire:

Measure the loaded radius (LR) of the rear wheel by measuring the distance from the ground to the center of the rear axle in inches. This can be performed with the motorcycle positioned upright on level ground and the rider sitting in a normal riding position. It may be helpful to average the measurements on both the left and right sides to ensure an accurate number.

Circumference= (6.2832) x (LR)

Next calculate the N/V ratio using the following formula:
N/V ratio= (Final drive ratio x 1056)/(Circumference)

Weight
This engine may only be installed in a highway motorcycle with a final curb mass that is equal to 1,058 lbs or less.

Exhaust
The exhaust system used on the motorcycle must meet backpressure specifications. The total (stagnation) pressure must be in the range of 2.7 to 6.8 inches of water. This measurement is taken 5.5" from the inlet of the front exhaust head pipe with the engine operating at 2000 RPM ±100 RPM in neutral. The total stagnation pressure can be measured using a pitot tube facing into the exhaust stream and a manometer that reads in inches of water.

Oxygen sensors for closed loop control must be installed in the exhaust head pipes. The sensors must be located such that they are in the range of 4 to 12 inches from the inlet of the head pipe.

Labels
Two unique labels with the headings "Vehicle Emissions Control Information" (VECI) and "Vehicle Evaporative Hose Routing" are provided with the engine. The VECI label contains the engine family identification, engine tune-up specifications, and the serial number of your engine. The Vehicle Evaporative Hose Routing label shows the proper evaporative system hose routing for the engine.

NOTE: *Clean the areas where the labels will be affixed before installing them. Once affixed, the labels are permanent and can not be removed without the label being destroyed.*

Both labels must be installed on the motorcycle frame or on a part that is permanently attached to the frame and must be located so they are visible with the seat removed.

Evaporative System
To meet evaporative emission regulations the evaporative system must be installed on the motorcycle. The evaporative canister, vapor valve, and R11-A hose is included with the engine for hooking up the evaporative system. It is required these components are installed and the following requirements for the fuel tank and cap are met.

The fuel tank must be constructed out of metal and shall have a maximum capacity of 5 US gallons or less. The fuel tank shall be located such that no surface of the tank is closer than ⅛ inch to the engine. A fuel tank vent must be provided to vent fuel vapors out through the vapor valve to the evaporative canister, and a Harley-Davidson® #61272-92B or equivalent fuel cap must be used.

Permeation
The EPA permeation standard applies to fuel tanks and fuel hose. To meet the permeation standard the following conditions must be met for the fuel tank and fuel hose.

The fuel tank consists of the tank itself, and any components mounted directly to it excluding fuel hoses. This includes the fuel cap if it is mounted directly to the tank. To meet the permeation standard the fuel tank must be constructed of metal and all gaskets on the fuel tank must have a total exposed surface area of less than 1,000 mm^2.

The exposed surface area of the gaskets is considered to be the surface area of the gasket that is exposed to fuel or fuel vapor. *To determine the exposed surface area of a circular gasket the following equation would be used:*

Exposed Surface Area= a x 3.14 x d
where: a = thickness of the gasket
d = ID of circular opening

To determine the exposed surface area on an O-ring seal the following equation would be used:

Exposed Surface Area= 0.25 x 3.14 x (X2 – Y2)
where: X = ID of circular opening
Y = OD of inset groove for O-ring

The fuel hose used on the engine must also meet permeation standards. The permeation standard applies to any hose that carries fuel or fuel vapor that is not vented to atmosphere. This includes, but is not limited to, the fuel hose from the tank to the fuel rail and any fuel tank crossover hose.

The fuel hose included with S&S® engines meets the permeation standards based on the design of the hose. This fuel hose may be used and can be shortened if needed. Any additional fuel hose used that is not vented to atmosphere must meet R11-A or R12 SAE J30 specifications. Additional fuel hose is also available from S&S.

INSTALLATION INSTRUCTIONS

⚠ WARNING

Improper installation of engine or related components could result in injury or death to the operator and/or passenger and damage to the motorcycle.

⚠ CAUTION

New oil tanks and lines must be flushed to remove any debris that could damage the engine's oiling system.

The recommended oil tank capacity is 4 quarts oil and 1 quart air space. Use ½" ID oil line to ensure adequate oil supply capacity.

Minimum oil tank capacity is 3.5 quarts oil and 1 quart air space.

This S&S® X-Wedge™ Engine has been manufactured, assembled, and calibrated by S&S Cycle, Inc. Before proceeding, verify that this engine fulfills the requirements for your motorcycle. Installing an S&S engine into a motorcycle requires specialized knowledge, skills, and tools. For this reason installation should be performed by a professional mechanic.

Engine Installation

Due to differences in the engine mounting locations a frame designed for the X-Wedge Engine must be used. The engine must be mounted using the four mounting points on the lower cases and with a top support between the cylinder heads that is tied into the frame. The top support brace must connect the ⅜"-16 tapped bolt holes located on top of each cylinder head above the intake port and 7⁄16" grade 8 bolts must be used in the lower mounts.

Prior to installing the mounting bolts, the 4 lower engine mounts must be checked to verify the engine is sitting flat on all 4 mounts. This can be checked by using a feeler gauge between the mount and the frame. If the engine is not sitting flat on any of the mounts shims must be installed. Failure to properly shim the mounts could result in damage to the engine case not covered under warranty.

After the engine is shimmed, the lower mounting bolts can be installed and torque to 70-80 ft-lbs. The top engine mount can then be installed; it must connect between the front and rear cylinder heads and the frame.

The engine will accept the primary and stator charging system from a 2001 Harley-Davidson® Softail® or equivalent. Follow the manufactures instructions for installing the primary and stator to the engine.

Install Oil and Breather Hoses

Clean the oil tank to remove any debris. Using new ½" ID hoses connect the oil return hose, oil supply hose, and the oil tank vent hose following the "OIL LINE AND BREATHER SYSTEM DIAGRAM" below.

Fig. 7-2

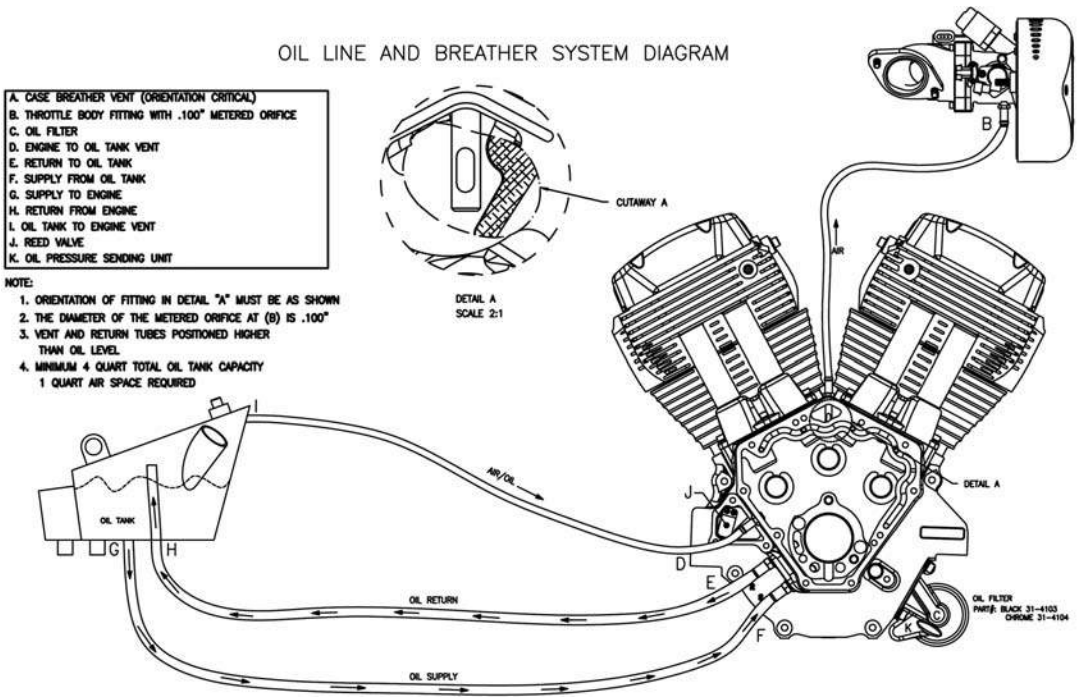

⚠ WARNING

The safety of the motorcycle rider is dependent on proper installation of this product. If you are not certain of your capabilities or do not have the correct tools for this installation, please consult a shop to have it done for you. Improper installation of this product could result in injury or death to the rider.

Do not connect the battery until completing the installation of the wiring and control system of the motorcycle. Failure to do so may result in damage to your wiring harness and other motorcycle electronics which can result in costly repair and service fees. Leaving the battery disconnected during the entirety of the installation will also prevent accidental starting of the motorcycle which could cause injury to yourself or others around you.

⚠ CAUTION

To avoid damage to the motorcycle and motorcycle components, follow the guidelines specified by the manufacturer when assembling and servicing your motorcycle.

⚠ WARNING

Take special care not to route the wiring directly over areas prone to reach high temperatures. Failure to do so may result in damage to your wiring harness and other motorcycle electronics which can result in costly repair and service fees.

Install Wiring and Engine Control Module

Overview

The California X-Wedge™ Engine comes equipped with an S&S® single throat throttle body and makes use of the S&S® Variable Fuel Injection system (VFI) with closed loop fuel and knock control. Included as part of the VFI system is the ECU, closed loop installation kit, knock control sub harness, and ignition coil. A wiring diagram has also been provided at the end of this manual for reference during installation.

Wiring Harness

A complete wiring harness is available from S&S®. A fuel injected 2002-2003 Harley-Davidson® FLT or Softail® engine subharness or equivalent may instead be used as a starting point. If an S&S® harness is not used, it is required that the provided closed loop and knock control circuits are added into the system.

Engine Control Unit

The engine control unit (ECU) provided with the X-Wedge Engine has been calibrated by S&S® for your engine. To meet anti-tampering requirements the ECU contains a locked calibration file that cannot be modified. Included with the ECU are mounting and installation instructions for the ECU and a Pro Tune 2 CD with instructions for accessing the ECU via a computer. This will allow the user to read engine trouble codes and verify sensor outputs for diagnostic purposes.

Vehicle Speed Sensor (VSS) and Speedometer

A properly connected and calibrated VSS and speedometer is important for proper engine operation as the ECU uses the vehicle speed input for idle control and engine history data. Listed below are the recommended VSS and speedometers for proper input of the vehicle speed to the ECU.

Vehicle Speed Sensor:

- H-D® #74430-00A or equivalent

Speedometers:

- H-D #67033-99A or equivalent
- Dakota Digital® #HLY-2002 rev A or equivalent
- Autometer® #19466 or equivalent

The vehicle speed sensor is routed first to the speedometer and then the speedometer creates a signal that is sent to the ECU. The signal from the speedometer must be a linear signal that is approximately ⅛th the frequency of the raw VSS signal. The speedometers listed above create this type of signal.

Due to differences in gear ratio and tire sizes between bikes, the Wheel Speed Gear Factor in the ECU must be adjusted for the gearing and tire size used. It is important this step is completed, as engine idle control activates based on the vehicle speed calculated from the Wheel Speed Gear Factor.

To check the ECU Wheel Speed Gear Factor, the speedometer must be calibrated first. If using an aftermarket speedometer, follow the manufacturer's instructions for calibration. If using an H-D speedometer, an S&S® Speedometer Calibrator PN 55-1070 may be used.

After completion of the speedometer calibration, the Wheel Speed Gear Factor can be checked and adjusted if needed. Checking the Wheel Speed Gear Factor can be done while running the bike on a dyno that has a speed output or by riding the bike on the road and comparing distances traveled between the ECU and odometer. Procedures for both methods can be found below.

Checking the Wheel Speed Gear Factor while running on a dyno:

1- Locate instruction sheet 51-1145 that has been provided with the ECU. Follow the instructions to install the ProTune 2 software, and connect to the ECU.
2- In ProTune 2 open the gauge panel by selecting "Gauge". In the window that opens, click on "View" then "Add". In the list that appears, locate the panel labeled "Vehicle Speed", and click "Add". This is the vehicle speed in MPH.
3- While driving the motorcycle at a steady speed on the dyno, observe the vehicle speed in ProTune 2 and compare to the speed shown by the dyno.
4- If the speeds are equal the Wheel Speed Gear Factor is correct. If the speeds are not equal calculate the error using the following equation:
5- Proceed to adjusting Wheel Speed Gear Factor on the next page.

$$ECU\_mph \big/ Dyno\_mph \equiv error$$

Checking the Wheel Speed Gear Factor using odometer miles:

1- Locate instruction sheet 51-1145 that has been provided with the ECU and follow the instructions provided in it to install the ProTune 2 software and connect to the ECU.
2- Record the initial ECU and speedometer mileage. The ECU mileage may be accessed by clicking on the "ECU Information" button. The Total Engine Mileage (miles) appears at the top of the "Stats Overview" tab. This will be your initial ECU mileage.
3- Ride the motorcycle to accumulate mileage on both the ECU and speedometer.
4- Record the final ECU and speedometer mileages and subtract the initial mileages from them to get the mileage traveled during the trip for both the ECU and speedometer. If the distances are equal the Wheel Speed Gear Factor is correct. If they are not equal proceed to the next step.
5- Calculate the Wheel Speed Gear Factor error using the following equation:
6- Proceed to adjusting Wheel Speed Gear Factor on the next page.

$$ECU\_miles \big/ Speedometer\_miles \equiv error$$

Adjusting Wheel Speed Gear Factor:

1- To access the Wheel Speed Gear Factor in ProTune 2 select "ECU Basic Setup".
2- The Select Data Source dialog box will appear. The dialog box will list the current active data sources; i.e. the ECU if it is connected, the demonstration data built into the software, and any calibration files that you accessed since starting the software. To select a data source, click on it to highlight it and then click "OK" or press "Enter". Select the ECU file from this dialog box and click "OK".

Fig. 7-3

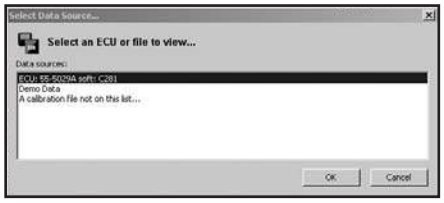

3- The ECU Basic Setup dialog box will appear. The top line of the dialog box shows the ECU or file that you are editing. Beneath it is an information box which will show you information about a function when it is selected.
4- The Wheel Speed Gear Factor is a value used by the ECU to scale the input from the speedometer to calculate the vehicle speed. To adjust wheel speed gear factor multiply the current value by the error found when checking the wheel speed gear factor.

Fig. 7-4

5- When you have finished viewing or editing the properties, click OK or press Enter to save the changes to the current data source. Click Cancel or press Esc if you do not wish to save the changes.
6- Rerun the procedure for checking Wheel Speed Gear Factor to verify it is now set correctly.

The Wheel Speed Factor will now be calibrated. If changes are made to the gearing, tire size, or speedometer in the future this process must be repeated.

Install Evaporative System

The evaporative system must be installed in its entirety following the instructions and diagram provided below.

NOTE: The vapor valve must be installed in a vertical orientation with the smaller diameter end pointing up as shown in the "Evaporative Hose Routing Diagram".

1- Determine a location for the evaporative canister that allows the vapor lines to be connected and install the evaporative canister onto the motorcycle.
2- Determine the routing of the evaporative vent hose connecting from the fuel tank vent, through the vapor valve, and to the fitting on the canister labeled "tank". The vapor valve must be installed in a vertical position with the smaller end pointing up as shown in "Evaporative Hose Routing Diagram". Ensure the hose will not come in contact with any hot or moving parts.
3- After the evaporative vent hose routing has been determined, cut the hose to length and make the connections.
4- Determine the routing of the evaporative purge hose that connects the fitting labeled "purge" on the canister to the 90 degree purge fitting on the throttle body as shown in the "Evaporative Hose Routing Diagram". Ensure the hose will not come in contact with any hot or moving parts.
5- After determining the evaporative purge hose routing, cut the hose to length and make the connections.
6- Secure the evaporative hoses to the motorcycle using proper wire ties so they will not come in contact with any hot or moving parts.

Fig. 7-5

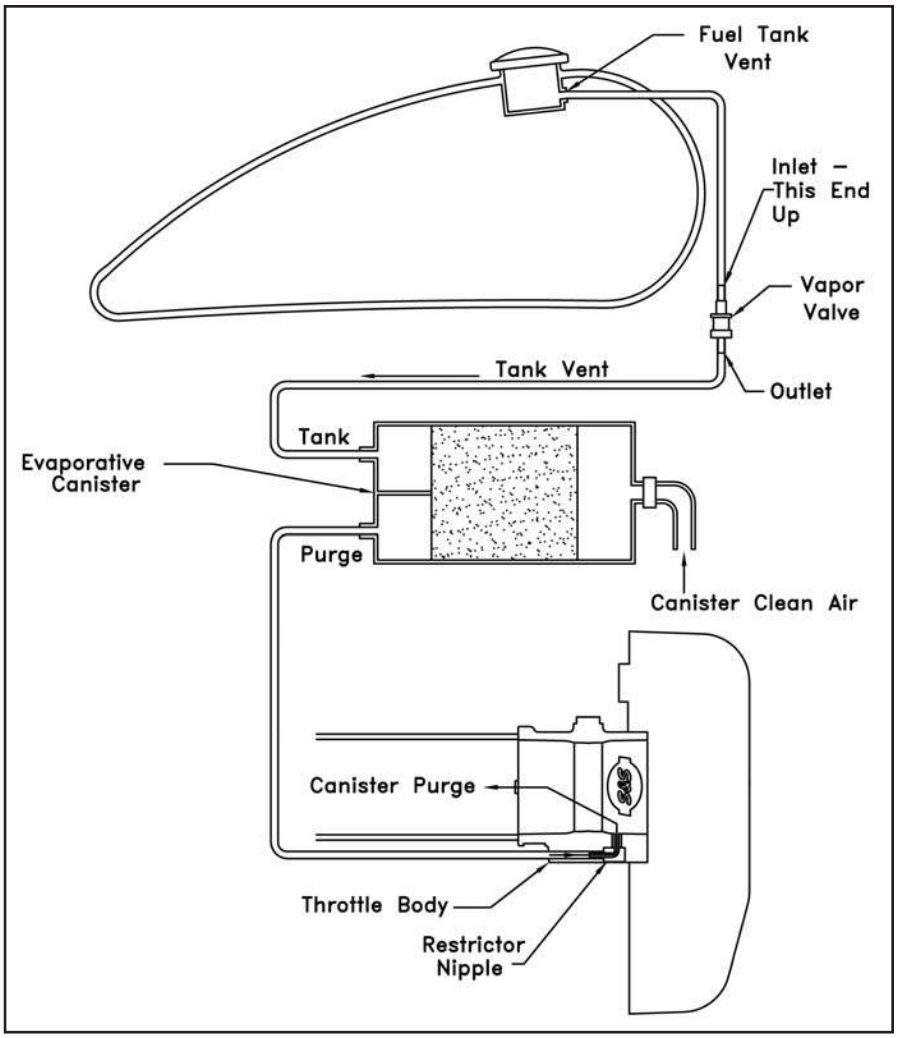

⚠ WARNING

Gasoline is very flammable and explosive under certain conditions. Do not smoke or expose gasoline to sparks or open flame.

Fuel hose must be clamped securely and not contact any hot surfaces where it could melt or catch fire, causing serious injury or death.

⚠ CAUTION

Gas fumes are toxic when inhaled. Perform installation in a well ventilated area away from open flames or sparks. Unwarranted sparks and inadvertent engagement of starter while working on electrical components can cause serious injury or death.

Fuel System

The X-Wedge™ engine requires a fuel supply of 58 psi to the fuel injectors. A fuel pump and regulator assembly is available from S&S® (PN 55-5089) that is designed for being mounted inside the fuel tank. Other pumps may be used as long as the supply is regulated to 58 psi and it provides a minimum supply of 45 L/hr. It is recommended a fuel filter that filters to 10 um be used.

⚠ WARNING

Fuel hose must be clamped securely with proper clamps and can not contact any hot surfaces where it could melt or catch fire, causing serious injury or death.

Connections

Fuel is supplied to both fuel injectors from a tee located in the fuel hose between the injectors. The engine is delivered with an extra length of fuel hose connected to the tee for connection to the fuel pump. This hose may be trimmed to fit your application if needed. Position fuel hose to avoid contact with hot cylinders or other engine parts.

Throttle/Cables

__NOTE:__ S&S throttle bodies require the use of a two cable, pull open - pull closed throttle assembly. All models equipped with a single cable throttle mechanism must be converted to the two cable, pull open - pull closed type. S&S offers a variety of these throttle assemblies.

Throttle Requirements

Any motorcycle equipped with single cable throttle system must be converted to a two cable system. Kits with 36" (91cm), 39" (99cm), 42" (107cm), 48" (122cm), or 52" (132cm) length cables are available. Throttle assembly kits may be ordered separately. See descriptions on next page.

Two cable throttle systems designed for a butterfly type carburetor/throttle body have cable fittings that can simply be "plugged in" to the S&S throttle body throttle linkage.

⚠ WARNING

Single, wire cable throttle will not mechanically close the throttle. If the throttle inadvertently sticks in the open position, loss of control of motorcycle and personal injury to you or others may result.

Optional S&S Two Cable Throttle Kits

Kits fit 1" (25.4mm) O.D. handlebars and can be used on most chassis. An adapter sleeve is available for use with handlebars having ⅞" (22.2mm) diameter ends. Fittings on provided cables readily "plug in" to S&S® throttle bodies. Kits include one opening side cable, one closing side cable, left and right handlebar grips, and handlebar clamps.

- Throttle kit with 36" (91cm) cables PN 19-0450
- Throttle kit with 39" (99cm) cables PN 19-0448
- Throttle kit with 42" (107cm) cables PN 19-0482
- Throttle kit with 48" (122cm) cables PN 19-0449
- ⅞" to 1" (22.2 to 25.4mm) adapter sleeve PN 19-0235

__NOTE:__ 1981 to 1990 OEM style cables may be used as replacement cables for throttle kits above.

1- Install new throttle assembly.
   a- Install new throttle assembly and cables. Position grip and cables so cables can be angled towards throttle body for easy adjustment and free operation.
   b- Apply light coat of clean cable lubricant to cables and fittings. Loosen cable adjustment locknuts and turn adjusting screw so half of the threads are exposed.

__NOTE:__ Throttle grip assembly must be assembled correctly and work freely to prevent possible sticking during operation. Cable routing must be free of tight bends to minimize cable to cable housing friction. Throttle must not bind and must snap shut to fully closed position when released.

Throttle/Cable Assembly

1- Install throttle cables on the throttle body.
   a- Remove throttle cable housing bracket, PN 11-2339.
   b- Install opening side throttle cable barrel fitting and throttle cable in throttle linkage on appropriate side of throttle cable housing bracket. Opening side cable housing outside diameter is smaller and measures .190" (4.826mm).
   c- Repeat step b for closing side throttle cable. Closing side cable has a spring around inner cable wire.
   d- Reinstall throttle cable housing bracket on the throttle body.
2- Turn throttle cable adjusters to remove excessive free play. Test the throttle to ensure it opens and closes freely. The throttle should snap shut when released. Turn handlebars to extreme left and open and close throttle, then turn bars to extreme right and repeat. If throttle binds, loosen cable adjusters to put more free play in cables. Tighten the adjusting screw locknuts after final adjustments are made.

⚠ WARNING

Incorrect cable adjustment may cause throttle to stick open, causing loss of control of motorcycle, serious injury or death.

Final Assembly and Checks

1- Check fuel line routing and connections.
2- Check evaporative system routing and connections.
3- Test throttle to ensure it opens and closes freely. Turn handlebars to extreme left and open and close throttle, and then turn bars to extreme right and repeat. Throttle must snap closed in all positions.
4- Reassemble any remaining components.
5- Install emission control label on motorcycle frame.
6- Verify all emission related instructions and requirements have been met.
7- Fill gas tank.
8- Check injectors, the fuel rail and fuel line connections for leaks.

⚠ WARNING

Gas leaks at inlet O-rings, fuel line connections, or fuel injector may flood engine and overflow into surrounding area creating fire hazard.

⚠ CAUTION

Failure to break-in engine according to the correct procedure may result in serious damage to engine that is not repairable under warranty.

Troubleshooting Tips

The following is a list of common issues found during a new installation. Included with the ECU is also a CD and instructions for running the Pro Tune 2 software. This will allow access from a computer connected to the ECU to read engine trouble codes and sensor outputs for troubleshooting problems. See the instructions included with the Pro Tune 2 CD for installing the software on a PC.

1- Engine will not start:
   a- Weak or no-spark condition may be caused by fouled plugs, a discharged battery, improper wiring to the coil, or damaged coil. Verify condition of components and wiring.
   b- Lack of fuel may be caused by lack of fuel in the tank, improper wiring to pump, fuel hoses disconnected, or improper fuel pressure. Verify adequate fuel in tank and fuel pressure at fuel rail is 58 psi.
   c- Bank angle sensor not installed or wired incorrectly. Verify installation of bank angle sensor and wiring.
2- Engine will not run at steady speed or RPM:
   a- Restriction in fuel supply. Verify fuel pressure at fuel rail.
   b- Injector or oxygen sensor wires swapped front to rear. Check for proper orientation of wires to the fuel injectors and oxygen sensors.
   c- Lack of Vehicle Speed Signal (VSS) or improperly calibrated VSS. The ECU uses the VSS to determine when the engine should be in idle control. If this signal is not connected to the ECU, the idle control system will not work properly and may cause engine speed to vary. Likewise, if the Wheel Speed Gear Factor is not correct, the ECU may not enter idle control at the appropriate time. Additionally, if the end of the VSS in the transmission is contaminated (i.e. with metal filings), it may produce a signal when the vehicle is stopped and inhibit idle control.

CONCLUSION

Complete remainder of installation according to the applicable service manuals. Refer to the California X-Wedge™ Engine Owner's Manual for important information on breaking in the engine.

Because every industry has a leader

Illustrations & Warranty

CASES

1. Case half ..... **NA**
2. Fitting, pipe, straight
   ¼-18 NPTF x 1.510 x ½, zinc **50-8158**
3. Plug ⅛-27 NPT with taper (10 pack) **50-1015**
4. Stud, cylinder base, 6.68", black oxide
   1984-'99 BT (10 pack) **106-0884**
5. Plug, magnetic, SH, ½-20, transmission
   crankcase drain plugs with o-ring **50-8335**
6. Reed, breather valve, X-Wedge, (5 pack) ... **106-0700**
7. Stop, breather reed valve, X-Wedge
   (5 pack) **106-0742**
8. Screw, BHS, 6-32 x 5⁄16", stainless steel
   (10 pack) **106-0725**
9. Pin, dowel, .438 diameter x .610
   (10 pack) **50-8179**
10. Washer, flat, 5⁄16 x 11⁄16 x 1⁄16 (10 pack) **50-7069**
11. Screw, HHCS, 5⁄16-18 x 3¾", zinc, (10 pack) **50-0152**
12. Bearing, assembly, inner, needle, cam
    1999-up BT (3 pack) **106-0885**
13. Bearing, main journal, standard, plain
    X-Wedge (4 pack) **106-0570**
14. Dowel pin, .188" x .625" (10 pack) **106-0613**
15. Dowel pin, ¼" x ½" (5 pack) **50-8105**
16. Spacer, charging system
    1.75" x 1.25" **106-0736**
    1.75" x 1.115" **106-0737**
17. Fitting, pipe, straight, male, chrome, steel,
    ⅛-27 NPTF x 1.344" x .375" (10 pack) **106-0617**
18. Left main bearing oil seal 1970-up BT
    (5 pack) **31-4110**
19. Tappet cover, set
    Polished, X-Wedge **106-0745**
    Silver, X-Wedge **106-0746**
    Wrinkle black, X-Wedge **106-0747**
20. Pin, dowel, .250" x 1.125", (10 pack) **106-0615**
21. Screw, SHCS, ¼-20 x ⅞"
    Bright zinc (10 pack) **50-0197**
    Chrome (10 pack) **106-0727**
22. Washer, flat, .260" x .425" x .060", chrome, steel
    (12 pack) **50-7013**
23. Gasket, tappet cover, X-Wedge
    (10 pack) **106-0633**
24. Gasket, reed pocket, X-Wedge
    (10 pack) **106-0631**
25. Cover, reed pocket
    Polished, X-Wedge **106-0597**
    Silver, X-Wedge **106-0598**
    Wrinkle black, X-Wedge **106-0599**
26. O-ring, oil feed line
    (-13), .437" I.D. x .565" O.D., Viton®
    (10 pack) **50-8078**
27. Oring, bottom, pushrod tube
    (-122), 1.112" I.D. Viton, (10 pack) **93-4046**
28. Fitting, hose, straight, ⅛-27
    NPTFx.500 ..... **106-2980**
29. Hose, vent, breather, .375" x .625" **106-3011**
30. Bracket, oil filter, X-Wedge
    Polished **106-0572**
    Silver **106-0573**
    Wrinkle black, X-Wedge **106-0574**
31. O-ring, Viton, -017 (10 Pack) **106-0681**
32. O-ring, Viton, size -022 (10 Pack) **106-0682**
33. Switch, oil pressure, packaged,
    X-Wedge **106-0744**
34. Fitting, straight, ¾-16 UNF 2a
    (5 Pack) **106-0618**
35. Screw, SHC, 5⁄16-18 x 1, zinc
    (10 Pack) **50-0145**
36. Washer, flat, 5⁄16 x 11⁄16 x 1⁄16, zinc, steel
    (10 Pack) **50-7069**

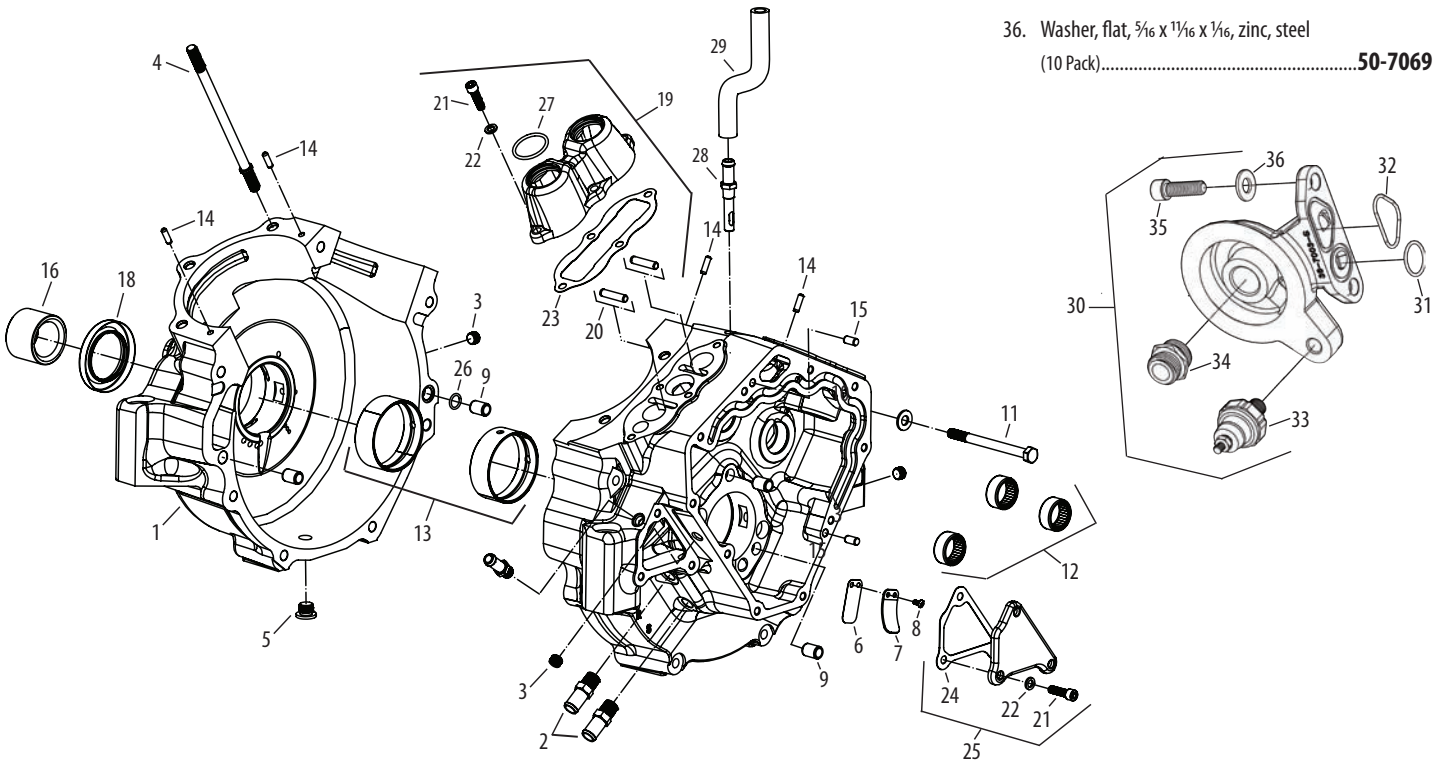

CAMS AND RELATED VALVE TRAIN COMPONENTS

1. Cover, intermediate cam - includes gasket and hardware
   Polished, X-Wedge **106-0590**
   Silver, X-Wedge **106-0591**
   Wrinkle black, X-Wedge **106-0592**
2. Seal, cam cover/cam, .875" x 1.375" x .250", viton, X-Wedge (3 pack) **106-0732**
3. Belt, cam drive, 127 tooth, packaged, 30mm, carbon, X-Wedge **106-0571**
4. Tensioner, belt, packaged, 30mm, X-Wedge **106-0751**
5. Washer, pinion sprocket, flanged, X-Wedge **106-0753**
6. Sprocket, cam, 38-tooth, X-Wedge **106-0740**
7. Pulley, front, idler, packaged, 1.50" x 30mm, X-Wedge **106-0696**
8. Gasket, intermediate cam cover, X-Wedge (5 pack) **106-0628**
9. Seal, pinion, dual lip, 22mm x 35mm x 7mm, X-Wedge (5 pack) **106-0733**
10. Sprocket, pinion, 19-tooth, X-Wedge **106-0741**
11. Pulley, rear, idler, packaged, 1.50" x 30mm, X-Wedge **106-0697**
12. Nut, flanged, ½-20 UNF-2B, steel (10 pack) **106-0677**
13. Screw, torx, socket head cap, flat countersunk head, alloy steel
    ⅜-24 UNF x 3½" black oxide (5 pack) **106-0731**
14. Key, woodruff, .125" x .500" x .491", steel (5 pack) **50-1010**
15. Screw, SHC, ¼-20 x 1¾", chrome (10 pack) **106-0726**
16. Washer, flat, .260" x .425" x .060", chrome, steel (12 pack) **50-7013**
17. Cover, belt drive
    Chrome, X-Wedge **106-0587**
    Silver, X-Wedge **106-0588**
    Wrinkle black, X-Wedge **106-0589**
18. Gasket, belt drive cover, X-Wedge (10 pack) **106-0624**
19. Camshaft, kit, .548, packaged, X-Wedge **106-0577**
20. Screw, SHCS, ¼-20 x ⅞" (10 pack) **50-0197**
21. Bearing, assembly, inner, needle, cam (3 pack) **106-1447**
22. Installation kit, cam belt drive (Not Shown) **36-0481**

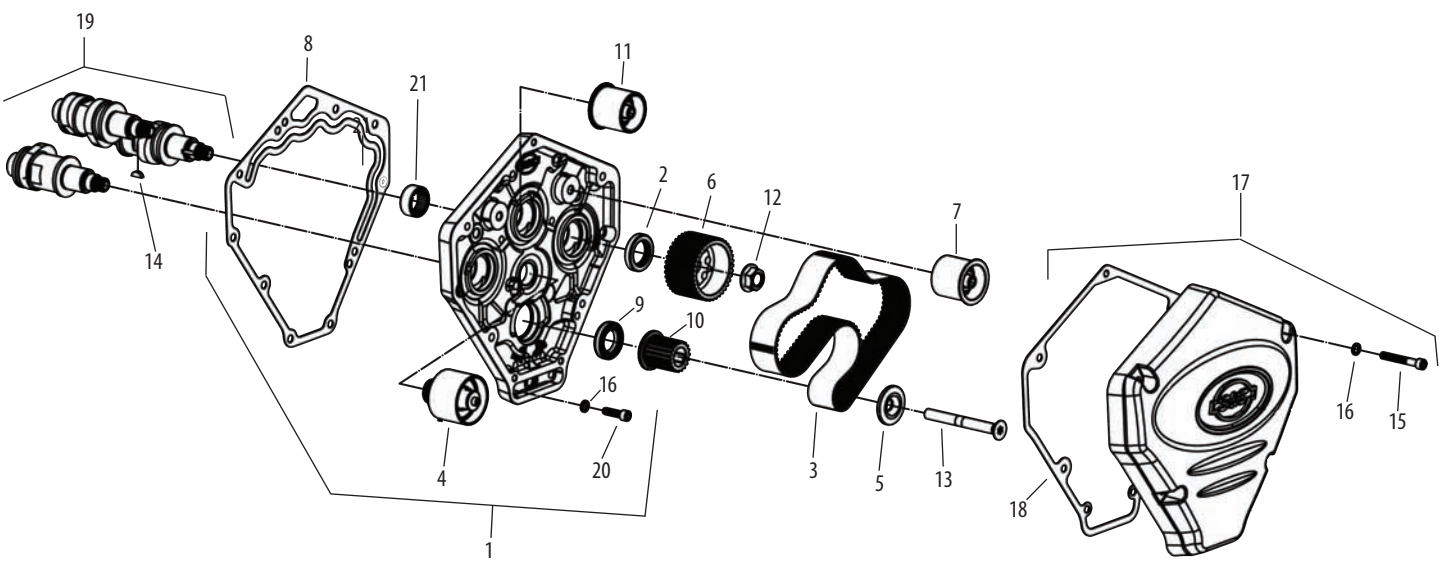

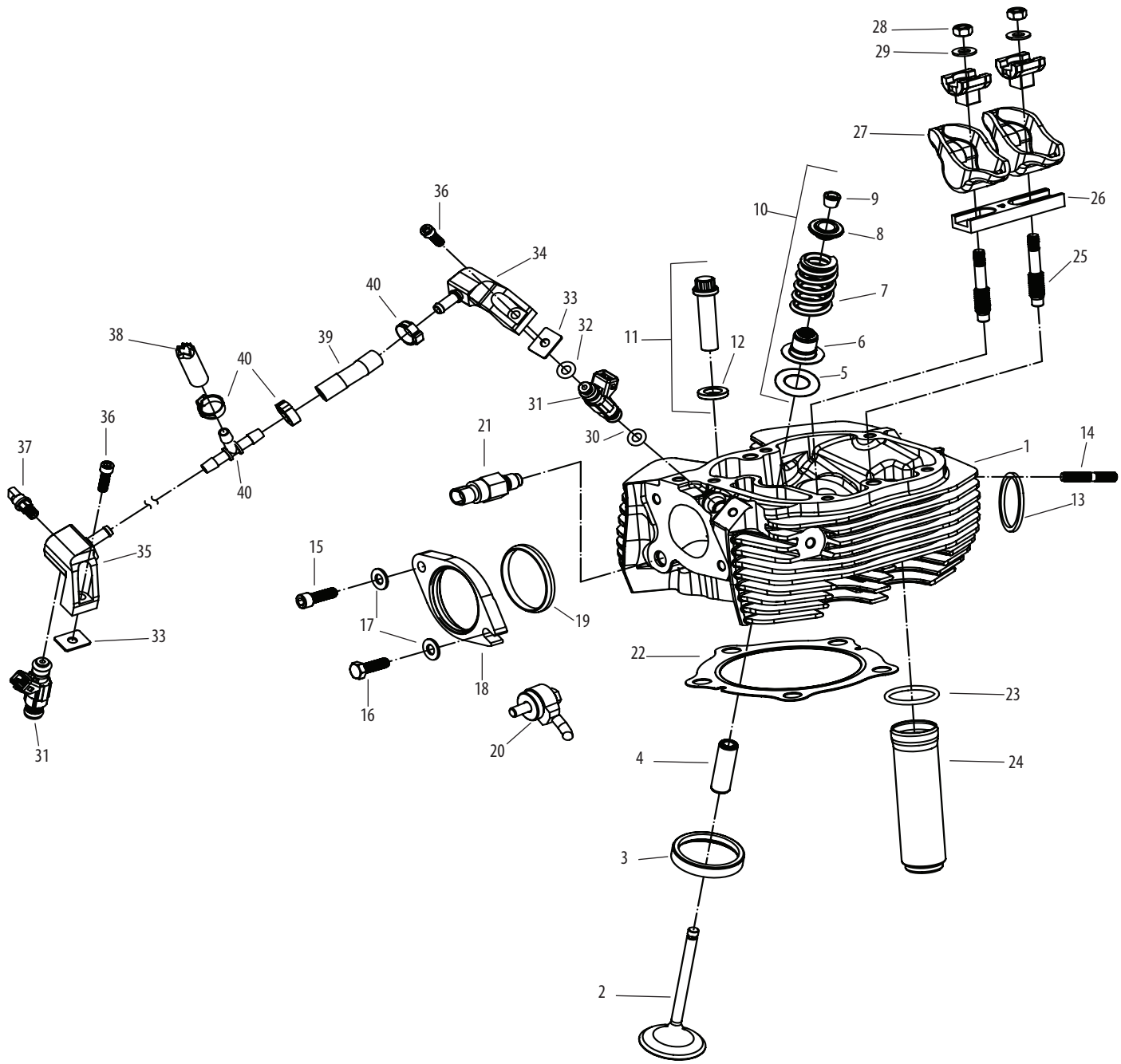
28
29
27
26
25
10
9
8
7
6
5
36
34
40
33
32
38
39
40
11
12
31
30
21
14
1
13
37
36
40
35
15
17
19
33
22
23
18
16
20
31
4
24
3
2

CYLINDER HEADS

1. Head, kit, .585", SW steel, X-Wedge™
   Full polished **106-0644**
   Premium Polish..... **106-0645**
   Silver..... **106-0646**
   Wrinkle black..... **106-0647**

2. Valve, 1984-'99 BT, 1986-'03 XL
   Intake,
   2" x 4.450", @ 1.943" gauge, ...**90-2000**
   Exhaust,
   1.605" x 4.428", @ 1.509" gauge **90-2001**

3. Valve seat
   Intake, 2.000", 1984-'99 BT.....**90-2002**
   Exhaust, 1.605", 1984-'99 BT.....**90-2003**

4. Valve guide, intake/exhaust, SW,
   standard, for use with bottom collar/seal
   #10 – 1984-up BT.....**90-2400**

5. Shim bottom collar (5 pack) (for rebuild only)
   .015".....**50-7161**
   .030 .....**50-7162**

6. Collar, bottom, valve spring, SW, w/seal,
   .585", steel, (4 pack) **106-0581**

7. Spring, valve, SW, packaged, .585",
   1984-up BT, 1986-2003 XL..... **106-0739**

8. Collar, top, valve spring, SW, .585", steel,
   (4 pack)..... **106-0582**

9. Valve keeper, 1984-2004 BT, 1986-'03, XL
   (8 pack).....**50-7166**

10. Spring, kit, valve, SW, steel, w/seal,
    .585", 1984-up, BT, 1986-2003 XL
    ..... **106-0772**

11. Head bolt, kit, S&S heads, w/washer, 12
    pt, 3/8-16 x 1.940" x .950"TD, X-Wedge,
    (10 pack) **106-0643**

12. Washer, .515" x .900" x .150", hardened steel,
    (10 pack) **106-0752**

13. Gasket, exhaust, stainless steel, 1984-'99
    BT,1986-2003 XL, (10 pack).....**93-1072**

14. Exhaust port stud 5/16" x 1.7",
    (5 pack).....**50-1028**

15. Screw, SHCS, 5/16-18 x 1", zinc
    (10 pack) **50-1045**

16. Bolt, mounting, HH, grade 5, 5/16-18 x 1",
    zinc (10 pack) **50-0155**

17. Washer, flat, .344" x .688" x .065", zinc,
    steel (10 pack).....**50-7069**

18. Flange, manifold, X-Wedge,
    (4 pack)..... **106-0619**

19. Seal, manifold, 2.060" x 2.285" x .0240",
    X-Wedge, (10 pack)..... **106-0676**

20. Sensor, kit, knock, IST,
    w/o bracket **55-1096**

21. Sensor, temperature, cylinder head,
    packaged, 4 1/8" 1984-'99 BT, 1999-up BT
    .....**55-1014**

22. Gasket, head, .043",
    4 1/8", graphite, X-Wedge,
    (10 pack) **106-0626**
    4 1/4", graphite, X-Wedge,
    (10 pack) **106-0625**
    4 3/8", graphite, X-Wedge,
    (10 pack) **106-0627**

23. O-ring, (-220), 1.375" ID x 1.625" OD, viton
    (5 pack).....**50-8245**

24. Pushrod cover, set, packaged,
    X-Wedge..... **106-0698**

25. Stud, 5/16-24, 7/16-14 x 2.44"
    (4 pack)..... **106-0743**

26. Retainer, alignment, rocker arm support,
    Front..... **106-0778**
    Rear **106-1165**

27. Rocker arm, set, X-Wedge..... **106-0716**

28. Nut, Lock, HH, Gr8, 5/16-24 x 17/64", Zinc
    Plated,Steel, (5 Pack) **106-2940**

29. Washer, flat, .344" x .688" x .065", zinc
    (10 Pack) **50-7069**

30. O-ring, bottom, injector, .310" ID x .580"
    OD, black, (10 pack).....**50-1067**

31. Fuel injector, assembly, style B, packaged,
    34.8lbs/hr.....**55-5005**

32. O-ring, top, injector, .290" ID x .570" OD, black,
    (10 pack) **50-1066**

33. Insulator, hold down, fuel injector,
    (10 pack) **106-1616**

34. Clamp, front, hold-down, fuel injector,
    packaged **106-0578**

35. Clamp, rear, hold-down, fuel injector,
    packaged **106-0580**

36. Screw, SHC, 1/4-20 x 7/8, zinc,
    (10 pack) **50-0197**

37. Valve, bleed, packaged,
    1/16-27 NPT..... **106-0755**

38. Fuel line, cut to size, 5/16" x 12", black,
    rubber (5 pack)..... **106-0620**

39. Fuel line, cut to size, 5/16" x 2.250", black,
    rubber (5 pack)..... **106-0621**

40. Clamp, hose, Stepless® Ear, 15.3mm,
    (10 pack) **106-2251**

41. Fitting, hose, tee, 5/16", black, glass filled nylon,
    (5 pack) **106-0616**

OIL PUMP

1. Oil pump, kit, X-Wedge **106-0680**
2. Valve, pressure relief, packaged, X-Wedge **106-0774**
3. Plate, S&S oil pump, packaged, X-Wedge **106-0694**
4. Plate, divider, S&S oil pump, X-Wedge (2 Pack) **106-0693**
5. Rotor, set, oil pump return, packaged, X-Wedge **106-0717**
6. Rotor, set, oil pump supply, packaged, X-Wedge **106-0722**
7. Spring, relief valve, X-Wedge (5 Pack) **106-0738**
8. Screw, HHC, 5/16-18 x 2¼ (10 Pack) **106-0723**
9. Washer, flat, zinc, .319" (10 Pack) **50-7028**
10. Dowel pin, .437" diameter x .610" (10 Pack) **50-8179**
11. Dowel pin, .437" x 1" (10 Pack) **106-0614**
12. Spring, wave, packaged, 1.60" x 2" x .085" **106-0773**
13. Oil pump , body, supply, packaged, X-Wedge **106-0679**
14. Oil pump , body, return, packaged, X-Wedge (Includes dowel pin #11) **106-0678**
15. Cover, oil pump , return, packaged, X-Wedge **106-0596**
16. Screw, HHC, GR5, 5/16-18 x 2¾ (10 Pack) **106-0724**
17. Washer, flat, .344" x .688" x .065", zinc, steel (10 Pack) **50-7069**

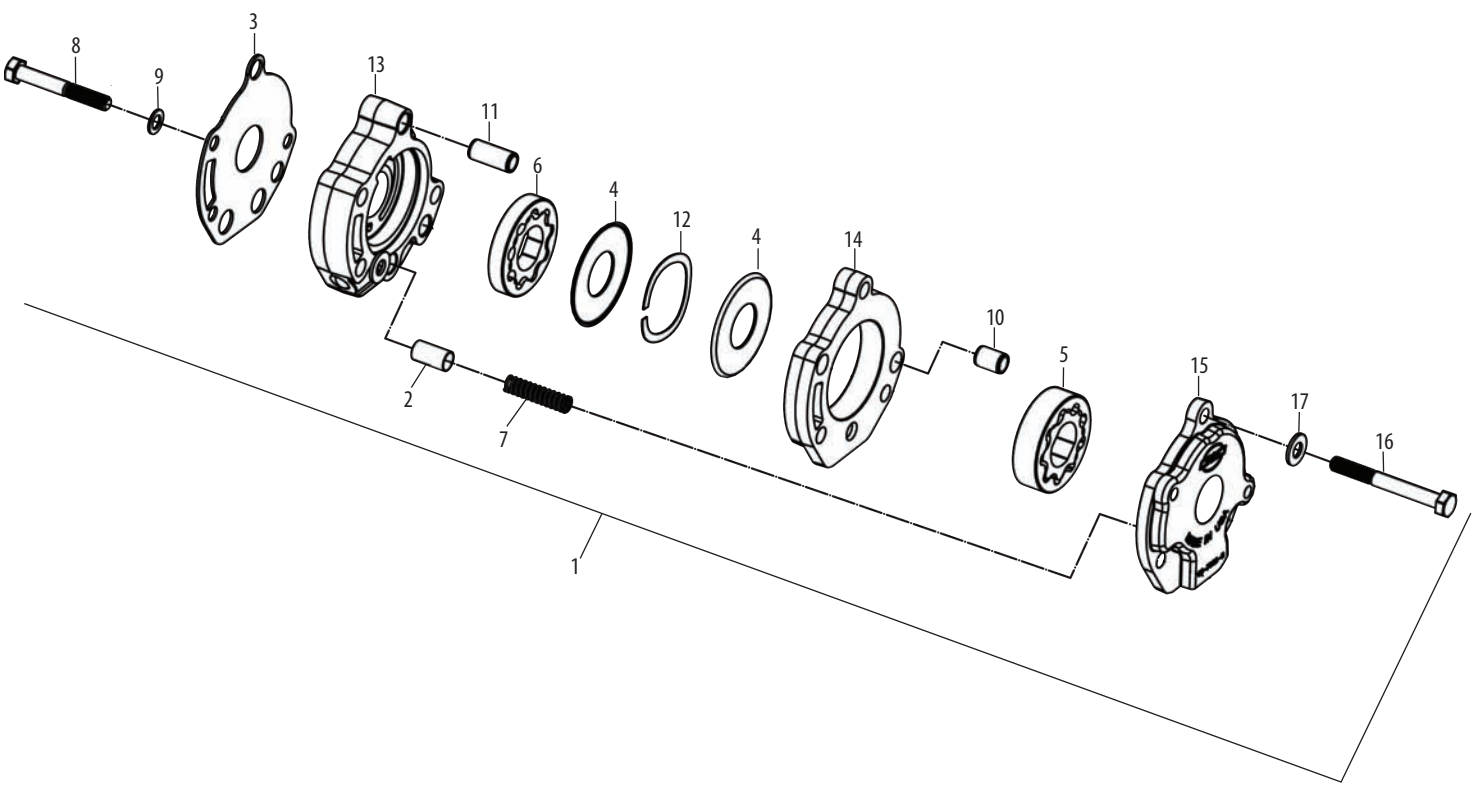

INTAKE PARTS

1. Manifold, SBEFI, 2¹⁄₁₆", packaged. X-Wedge
   Natural, ... **106-0674**
   Polished..... **106-0675**
2. Sensor kit, map, IST, w/VOES fitting, packaged
   ..... **55-1037**
3. Screw, SHSC, 10-24 x 1", (10 pack) **50-1063**
4. Washer, lock, .200" x .334" x .047",zinc, steel
   (10 pack)..... **50-1064**
5. Gasket, backplate, Super E & G
   52mm (10 pack)..... **106-2328**
   58mm (10 pack)..... **106-4663**
6. Gasket, Air Temperature Sensor, S&S® VFI
   (5 pack)..... **50-1059**
7. Throttle body, assembly, single bore, w/tps
   packaged, natural
   52mm..... **16-5100**
   58mm..... **106-3960**
8. Guide, throttle cable, w/hardware, X-Wedge
   106-0634
9. Oring, (-036), 2.364" id x 2.504" od, nitrile
   (10 pack)..... **50-1065**
10. Oring, (-018) .739" id x .879" od x .070, viton
    (10 pack) **50-1061**
11. Cap, canister purge fitting,
    (10 pack)..... **50-1062**
12. Motor, kit, idle air control, EFI, packaged
    ..... **55-5085**
13. Sensor, kit, throttle position, VFI, packaged
    ..... **55-5058**
14. Screw, SLTD, PH, 10-24 x 1/4
    (10 pack)..... **50-0062**
15. Screw, 10-24 x .500 trimmed HXHD m/s
    (10 pack)..... **50-1060**
16. Screw, torx, m3 x 10mm, zinc, steel,
    (10 pack)..... **50-1058**
17. Screw, torx, m4 x 12mm, zinc, steel
    (10 pack)..... **50-1056**
18. Washer, flat, 4mm x 9mm x .9mm,
    stainless steel, (10 pack) **50-1057**
19. Sensor, kit, temperature, intake air,
    packaged..... **55-5041**

20 Fitting, hose, straight, 1/8-27 NPTF x .375",
   w/5/16 T, zink, steel, (5 pack) **106-3546**

21. Jet, Main, Series 72, .100"
    (5 pack) **11-7250**

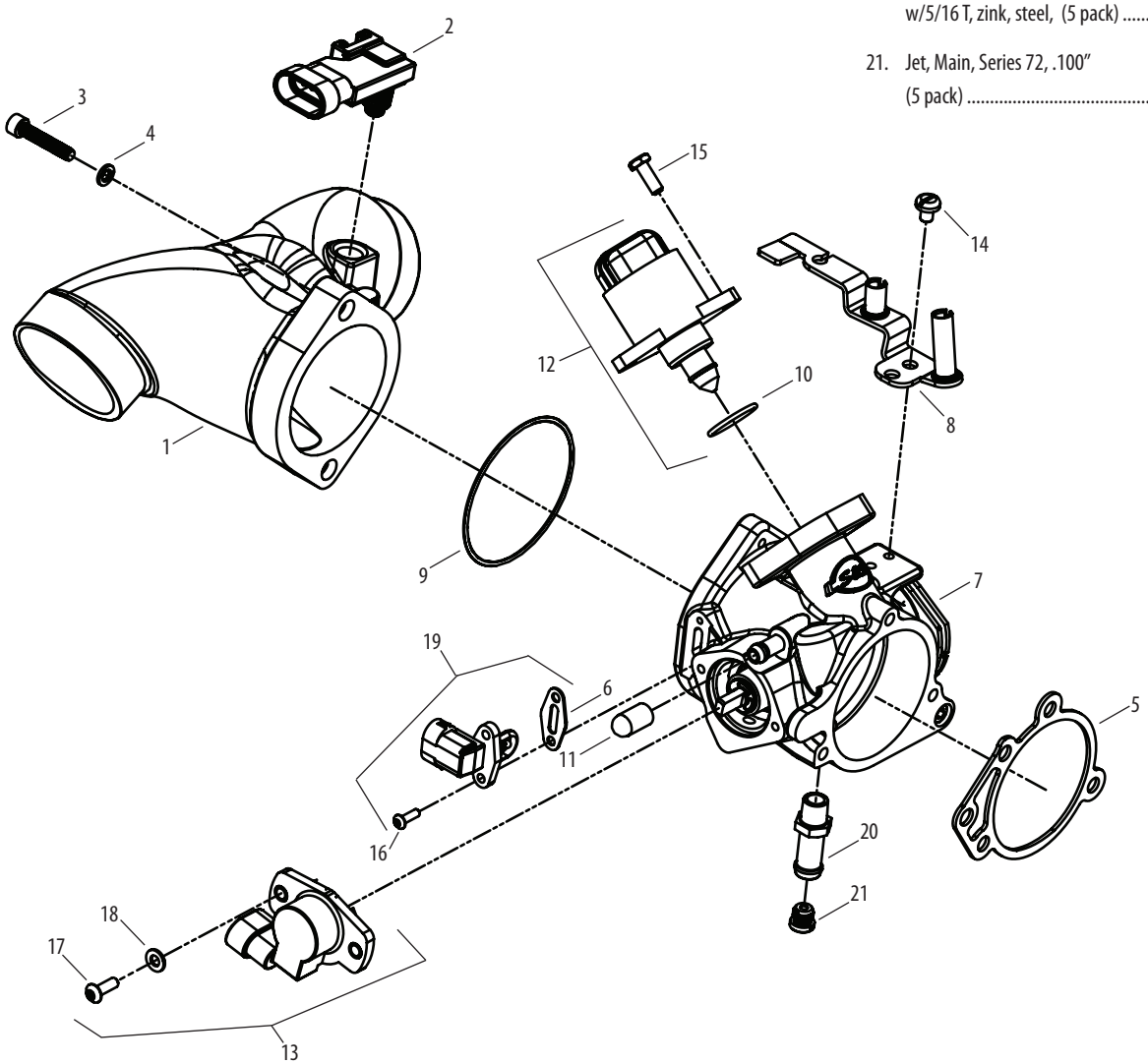

SINGLE BORE TUNED INDUCTION SYSTEM

1. Tuned intake, 2.19", single-bore
   Natural **17-1001**
   Black **17-1003**
   Chrome **17-1005**
2. Gasket, intake-adapter plate, tuned intake (10 Pack) **17-1019**
3. Adapter, intake runner, SBEFI, chrome, steel **17-1014**
4. Screw, LSHC, ¼-20 x ½", black oxide (10 Pack) **106-0818**
5. Screw, SFHC, 5⁄16-18 x 5⁄8", polished, stainless steel (2 Pack) **50-1071**
6. Screw, cable guide & air cleaner backplate (10 Pack) **50-1070**
7. Bracket kit, S&S X-Wedge **106-0561**
8. Screw, CHC, 5⁄16-18 x 1¼", chrome (2 Pack) **50-1078**
9. Gasket, backplate, Super E/G (10 Pack) **106-2328**
10. O-ring, (-43), 3.500" ID x 3.625" OD, viton (5 Pack) **50-1083**
11. Filter, air, S&S VFI, conical
    Red **17-1020**
    Blue **17-1023**
12. Tuned intake assembly
    Natural **106-1007**
    Black **106-1009**
    Chrome **106-1012**

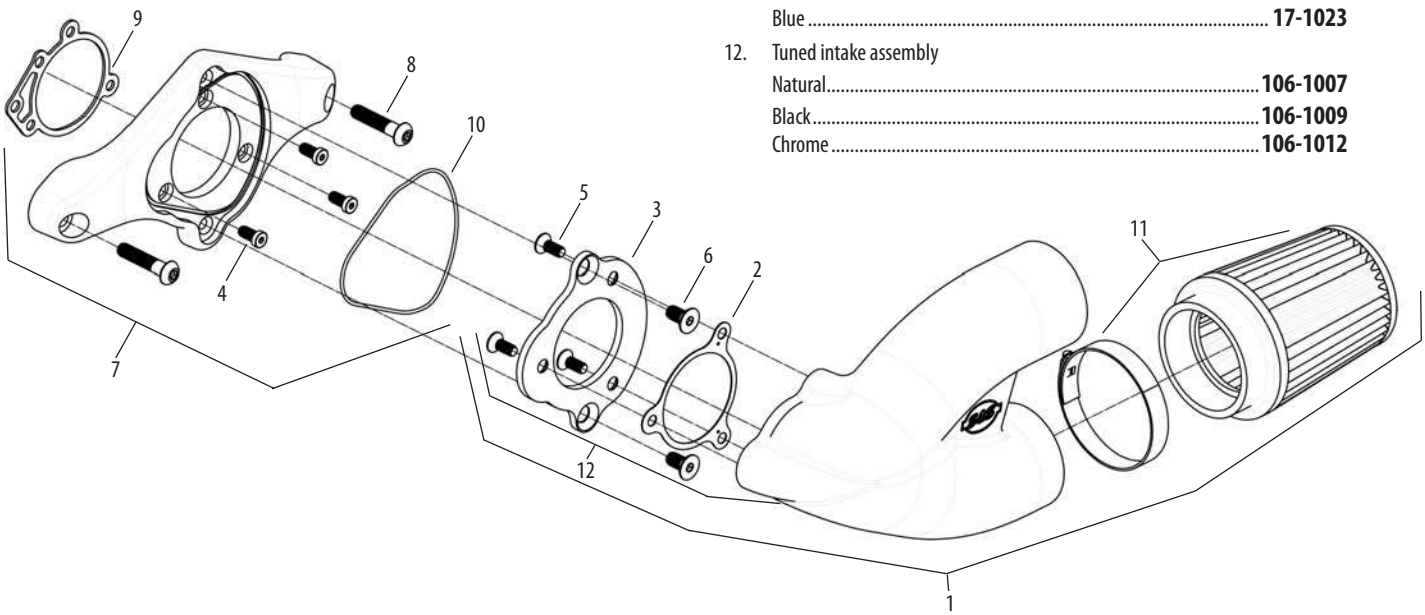

TEARDROP AIR CLEANER

1. Air cleaner kit, SBEFI, noise reduction
   Chrome **106-0020**
2. Gasket, backplate, Super E/G, CV adapter, .0625"
   (10 pack) **106-2328**
3. Backplate, air cleaner, SBEFI, packaged **106-0568**
4. Screw, SHC with Threadlock, ¼-20 x ½", Zinc-plated **106-2105**
5. Backplate seal, Neoprene (10 pack) **106-0887**
6. Screws, SHCS, 5⁄16-18 x 1¼" (10 pack) **106-0728**
7. Air filter, Super E/G, teardrop, standard, pleated, packaged **17-0054**
8. Cover, air cleaner, teardrop, desperado, packaged
   Chrome **17-0004**
9. Screw, Phil/OH, ¼-20 x 1" (10 pack) **50-0094**

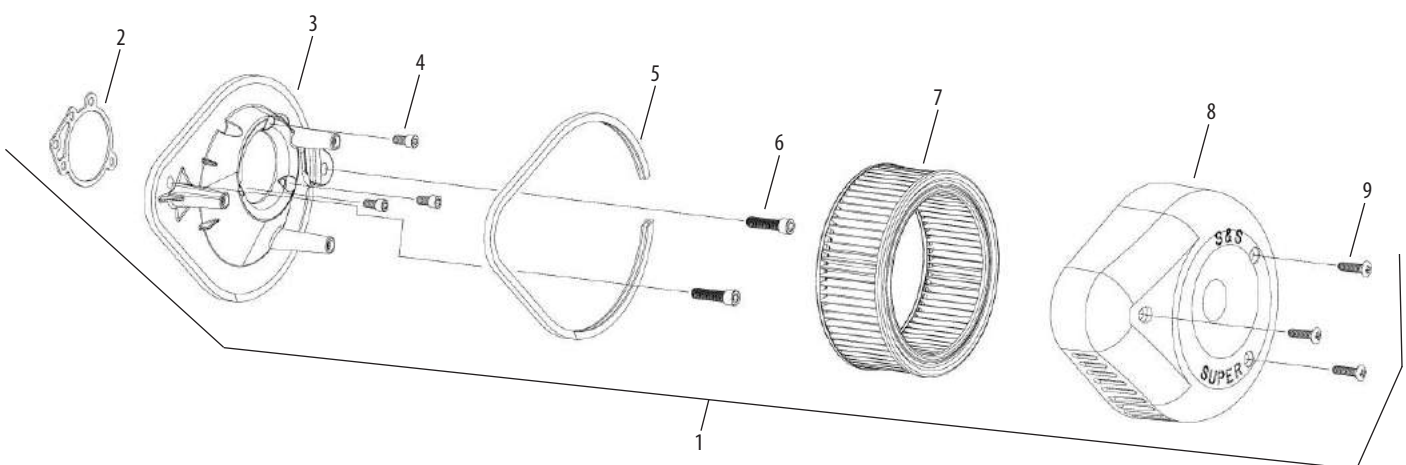

LIMITED WARRANTY COMPLETE FACTORY ASSEMBLED ENGINES

Who Is Covered By This Warranty?

This warranty covers only the original Consumer Purchaser of the Complete Factory-Assembled Super Stock Engine (the "Engine") and is not transferable.

What Does This Warranty Cover?

S&S Cycle, Incorporated (the "Company") warrants this Engine to be free from defects in material and workmanship. If the Engine or any part thereof becomes defective during the warranty coverage period, the Company will, at its option, repair or replace the Engine or any, or all, defective parts. Repair or replacement of defective parts is the sole and exclusive remedy.

How Long Is The Warranty Coverage?

The warranty coverage remains in force for a period of twelve (12) months from the date that the original Consumer Purchaser buys the Engine. Engines specifically designed for and sold with the S&S Intelligent Spark Technology ignition system are covered by a special twenty four (24) month warranty. However, warranty coverage will automatically terminate if the original Consumer Purchaser sells or otherwise transfers all or any portion of the Engine.

What Is Not Covered by This Warranty?

The Company shall not pay or be responsible for the cost of shipping the defective Engine or part to the Company for service under this warranty, nor will the Company pay for the cost of labor to remove and/or replace the defective Engine or part.

Moreover, the Company shall have no obligation under this warranty in the event that the Engine becomes defective in whole or in part as a result of improper installation, break-in, maintenance, or use, or any other misuse or mistreatment of the Engine, including, without limitation, operation of the Engine with fuels, oils or lubricants not conforming to specifications published by the Company for use in or with the Engine or continued operation of the Engine after a defect or malfunction occurs or is identified or suspected.

The Company shall have no obligation under this warranty for defects in the Engine's black powdercoat finish, when that option is selected, if the defects are caused by, but not limited to, negligence of parties other than Company; an accident; ordinary wear and tear; assembly or disassembly; power washing; natural occurrences like stone chips; bead blasting; improper maintenance including the use of any harsh cleaning agent, chemical or solvent; and salt or other substances used on streets and highways for maintenance and safety. This warranty does not cover consumables, that is, those parts consumed in the normal operation of the Engine.

The Company provides touch-up paint with each powdercoated Engine. It is the customer's responsibility to repair minor finish damage to prevent or inhibit further deterioration.

It is the responsibility of the original Consumer Purchaser to cease operation as soon as a defect or malfunction is identified or suspected. The failure to cease operation once a defect or malfunction exists can cause substantial damage to the Engine that could otherwise be avoided.

In addition, the Company shall have no obligation under this warranty for defects in the Engine caused by alteration including, but not limited to, polishing; powdercoating; painting; removing or reconfiguring any components; modification, repair, or unauthorized service of the Engine.

The Company shall have no obligation under this warranty if the Engine is used in racing or similar competitive activities. The Company shall have no obligation under this warranty when a competition application, including but not limited to a turbocharger, supercharger or nitrous oxide, is used with the Engine. Further, the Company shall have no obligation under this warranty for any Engine that includes a Competition Package Option since the Package is for use in racing and similar competitive activities.

THE COMPANY SHALL NOT BE LIABLE FOR AND DISCLAIMS ALL CONSEQUENTIAL, INCIDENTAL, PUNITIVE OR SPECIAL DAMAGES ARISING OUT OF THE USE OF, OR INABILITY TO USE, THE ENGINE.

Some states do not allow the exclusion or limitation of incidental or consequential damages, so the above exclusion may not apply to you.

What Must The Original Consumer Purchaser Do To Qualify For Warranty Coverage?

Within thirty (30) days after the date of purchase of the Engine, the original Consumer Purchaser must return a completed Owner's Registration Card along with a copy of the invoice evidencing such purchase to the Company at the following address:

S&S Cycle, Incorporated
Attention: Technical Services
235 Causeway Blvd.
La Crosse, WI 54603

Phone: 608-627-8324 • Fax: 608-627-0773
Email: sstech@sscycle.com
Direct Phone: 608-627-TECH (8324)

THIS WARRANTY IS VOIDABLE AT THE COMPANY'S OPTION IF THE ORIGINAL CONSUMER PURCHASER DOES NOT RETURN TO THE COMPANY THE OWNER REGISTRATION CARD AND A COPY OF THE INVOICE WITHIN THIRTY (30) DAYS FROM THE DATE OF PURCHASE OF THE ENGINE.

LIMITED WARRANTY UNASSEMBLED ENGINES

Who Is Covered By This Warranty?

This warranty covers only the original Consumer Purchaser of the Unassembled Engine, the Factory-Assembled Basic Engine or the Factory-Assembled Basic Engine With Options (the "Engine") and is not transferable.

What Does This Warranty Cover?

S&S Cycle, Incorporated (the "Company") warrants this Engine to be free from defects in material and workmanship. If the Engine or any part thereof becomes defective during the warranty coverage period, the Company will, at its option, repair or replace the Engine or any, or all, defective parts. Repair or replacement of defective parts is the sole and exclusive remedy.

How Long Is The Warranty Coverage?

The warranty coverage remains in force for a period of twelve (12) months from the date that the original Consumer Purchaser buys the Engine. However, warranty coverage will automatically terminate if the original Consumer Purchaser sells or otherwise transfers all or any portion of the Engine.

What Is Not Covered by This Warranty?

The Company shall not pay or be responsible for the cost of shipping the defective Engine or part to the Company for service under this warranty, nor will the Company pay for the cost of labor to remove and/or replace the defective Engine or part.

Moreover, the Company shall have no obligation under this warranty in the event that the Engine becomes defective in whole or in part as a result of improper assembly, installation, break-in, maintenance, or use, or any other misuse or mistreatment of the Engine, including, without limitation, operation of the Engine with fuels, oils or lubricants not conforming to specifications published by the Company for use in or with the Engine or continued operation of the Engine after a defect or malfunction occurs or is identified or suspected.

The Company shall have no obligation under this warranty for defects in the Engine's black powdercoat finish, when that option is selected, if the defects are caused by, but not limited to, negligence of parties other than Company; an accident; ordinary wear and tear; assembly or disassembly; power washing; natural occurrences like stone chips; bead blasting; improper maintenance including the use of any harsh cleaning agent, chemical or solvent; and salt or other substances used on streets and highways for maintenance and safety. This warranty does not cover consumables, that is, those parts consumed in the normal operation of the Engine.

The Company provides touch-up paint with each powdercoated Engine. It is the Consumer Purchaser's responsibility to repair minor finish damage to prevent or inhibit further deterioration. It is the responsibility of the original Consumer Purchaser to cease operation as soon as a defect or malfunction is identified or suspected. The failure to cease operation once a defect or malfunction exists can cause substantial damage to the Engine that could otherwise be avoided.

In addition, the Company shall have no obligation under this warranty for defects in the Engine caused by alteration including, but not limited to, polishing; powdercoating; painting; removing or reconfiguring any components; modification, repair, or unauthorized service of the Engine.

The Company shall have no obligation under this Warranty if the Engine is used in racing or similar competitive activities. The Company shall have no obligation under this warranty when a competition application, including but not limited to a turbocharger, supercharger or nitrous oxide, is used with the Engine. Further, the Company shall have no obligation under this warranty for any Engine that includes a Competition Package Option since the Package is for use in racing and similar competitive activities.

THE COMPANY SHALL NOT BE LIABLE FOR AND DISCLAIMS ALL CONSEQUENTIAL, INCIDENTAL, PUNITIVE OR SPECIAL DAMAGES ARISING OUT OF THE USE OF, OR INABILITY TO USE, THE ENGINE.

Some states do not allow the exclusion or limitation of incidental or consequential damages, so the above exclusion may not apply to you.

What Must The Original Consumer Purchaser Do To Qualify For Warranty Coverage?

Within thirty (30) days after the date of purchase of the Engine, the original Consumer Purchaser must return a completed Owner's Registration Card along with a copy of the invoice evidencing such purchase to the Company at the following address:

S&S Cycle, Incorporated
Attention: Technical Services
235 Causeway Blvd.
La Crosse, WI 54603

Phone: 608-627-8324 • Fax: 608-627-0773
Email: sstech@sscycle.com
Direct Phone: 608-627-TECH (8324)

THIS WARRANTY IS VOIDABLE AT THE COMPANY'S OPTION IF THE ORIGINAL CONSUMER PURCHASER DOES NOT RETURN TO THE COMPANY THE OWNER REGISTRATION CARD AND A COPY OF THE INVOICE WITHIN THIRTY (30) DAYS FROM THE DATE OF PURCHASE OF THE ENGINE.

LIMITED WARRANTY STANDARD PARTS

Who Is Covered By This Warranty?

This warranty covers only the original Consumer Purchaser of these parts and is not transferable.

What Does This Warranty Cover?

S&S Cycle, Incorporated (the "Company") warrants these parts to be free from defects in material and workmanship. If the parts become defective during the warranty coverage period, the Company will, at its option, repair or replace any, or all, defective parts. Repair or replacement of defective parts is the sole and exclusive remedy.

How Long Is The Warranty Coverage?

The warranty coverage remains in force for a period of twelve (12) months from the date that the original Consumer Purchaser buys the parts. However, warranty coverage will automatically terminate if the original Purchaser sells or otherwise transfers all or any portion of the purchased parts.

What Is Not Covered by This Warranty?

The Company shall not pay or be responsible for the cost of shipping the defective parts to the Company for service under this warranty, nor will the Company pay for the cost of labor to remove and/or replace the defective parts.

Moreover, the Company shall have no obligation under this warranty in the event that the parts become defective in whole or in part as a result of improper assembly, installation, break-in, maintenance, or use, or any other misuse or mistreatment of the parts, including, without limitation, operation of the parts with fuels, oils or lubricants not conforming to specifications published by the Company or continued operation of the parts after a defect or malfunction occurs or is identified or suspected.

The Company shall have no obligation under this warranty for defects in parts with a powdercoat finish, when that option is selected, if the defects are caused by, but not limited to, negligence of parties other than the Company; an accident; ordinary wear and tear; assembly or disassembly; power washing; natural occurrences like stone chips; bead blasting; improper maintenance including the use of any harsh cleaning agent, chemical or solvent; and salt or other substances used on streets and highways for maintenance and safety.

The Company provides touch-up paint with powdercoated parts. It is the customer's responsibility to repair minor finish damage to prevent or inhibit further deterioration.

It is the responsibility of the original Consumer Purchaser to cease operation as soon as a defect or malfunction is identified or suspected. The failure to cease operation once a defect or malfunction exists can cause substantial damage to the Company's parts that could otherwise be avoided.

In addition, the Company shall have no obligation under this warranty for parts defects caused by alteration including, but not limited to, polishing; powdercoating; painting; removing or reconfiguring any components; modification, repair, or unauthorized service.

The Company shall have no obligation under this warranty if the parts are used in racing or similar competitive activities. The Company shall have no obligation under this warranty when a competition application, including but not limited to a turbocharger, supercharger or nitrous oxide, is used with the Engine. Further, the Company shall have no obligation under this warranty for any parts that are included in a Competition Package Option offered by the Company since the Package is for use in racing and similar competitive activities.

THE COMPANY SHALL NOT BE LIABLE FOR AND DISCLAIMS ALL CONSEQUENTIAL, INCIDENTAL, PUNITIVE OR SPECIAL DAMAGES ARISING OUT OF THE USE OF, OR INABILITY TO USE, THESE PARTS.

Some states do not allow the exclusion or limitation of incidental or consequential damages, so the above exclusion may not apply to you.

LIMITED WARRANTY RETURN AUTHORIZATION

What Are The Procedures To Obtain Service Under This Warranty?

To obtain service under this warranty, the original Consumer Purchaser should immediately contact the dealer where the Engine was purchased. The dealer will then contact the Company for a determination as to whether the defect in the Engine or part is covered by this warranty.

THE DEALER OR SERVICE PROVIDER MUST RECEIVE AUTHORIZATION FROM THE COMPANY BEFORE PROVIDING SERVICE UNDER THIS WARRANTY.

In the event that the Company determines the Engine or part must be returned to the Company for evaluation or service, the Company will provide the dealer with a Return Authorization Number to put on the shipping container for identification.

The original Consumer Purchaser or dealer must clean and properly package the Engine or part so as not to cause further damage and return the Engine or part, shipping costs prepaid, to the Company. The Return Authorization Number must be clearly visible on the outside of the shipping container. If the Engine or part must be cleaned prior to warranty inspection the cost of cleaning will be charged to the original Consumer Purchaser or dealer.

The original Consumer Purchaser or dealer must also send to the Company a detailed explanation of the relevant facts concerning the nature of the problem, the specific use of the Engine, and the circumstances giving rise to the defect or problem.

If it is not practicable to contact the dealer for warranty service, the original Consumer Purchaser may contact the Company at the following address, telephone number, fax number or e-mail address:

S&S Cycle, Incorporated
Attention: Technical Services
235 Causeway Blvd.
La Crosse, WI 54603

Phone: 608-627-8324 • Fax: 608-627-0773
Email: sstech@sscycle.com
Direct Phone: 608-627-TECH (8324)

Are There Other Warranties?

THE WARRANTIES STATED IN THIS WARRANTY REPLACE ALL OTHER WARRANTIES, EXPRESS OR IMPLIED, INCLUDING WITHOUT LIMITATION, THOSE OF MERCHANTABILITY AND FITNESS FOR A PARTICULAR PURPOSE, AND ANY OTHER OBLIGATIONS OR LIABILITIES ON THE PART OF THE COMPANY WHETHER IN CONTRACT, WARRANTY, NEGLIGENCE OR OTHERWISE, TO THE EXTENT NOT PROHIBITED BY LAW.

Some states do not allow limitations on how long an implied warranty lasts, so the above limitation may not apply to you.

How Do State Laws Relate To This Warranty?

This warranty gives you specific legal rights. You may also have other rights that vary from state to state.